Training and Support

FIRST TECH CHALLENGE

FIRST RELIC RECOVERY℠

PRESENTING SPONSOR

Qualcomm

2017-2018 *FIRST*® Tech Challenge

PushBot v4b Build Guide

Horizontal Reach Robot

www.firstinspires.org

200 BEDFORD STREET ■ MANCHESTER, NH 03101

FIRST

FOR INSPIRATION & RECOGNITION OF SCIENCE & TECHNOLOGY

Sponsor Thank You

Thank you to our generous sponsors for your continued support of the *FIRST* Tech Challenge!

***FIRST*® Tech Challenge**
Season Presenting Sponsor

Qualcomm

***FIRST*® Tech Challenge**
Official Program Sponsor

Rockwell Collins

***FIRST*® Tech Challenge**
Official 3D Augmented Reality/
Virtual Reality Sponsor

ptc

Volunteer Thank You

Thank you for taking the time to volunteer for a *FIRST*® Tech Challenge event. *FIRST*® and *FIRST*® Tech Challenge rely heavily on volunteers to ensure events run smoothly and are a fun experience for teams and their families, which could not happen without people like you. With over 4,600 teams competing yearly, your dedication and commitment are essential to the success of each event and the *FIRST* Tech Challenge program. Thank you for your time and effort in supporting the mission of *FIRST*!

Revision History		
Revision	**Date**	**Description**
1	9/13/2017	Initial Release
1.1	1/9/2018	• New cover page image • New Sponsor thank you image

Contents

Introduction

What is FIRST® Tech Challenge?

FIRST Tech Challenge is a student-centered program that focuses on giving students a unique and stimulating experience. Each year, teams engage in a new Game where they design, build, test, and program autonomous and driver operated robots that must perform a series of tasks.

They also cultivate life skills such as:

- Planning, brainstorming, and creative problem-solving.
- Research and technical skills.
- Collaboration and teamwork.
- Appreciating differences and respecting the ideas and contributions of others.

To learn more about *FIRST* Tech Challenge and other *FIRST*® Programs, visit www.firstinspires.org.

FIRST Tech Challenge is MORE THAN ROBOTS℠!
While competing, students develop personal and professional skills they will be able to rely on throughout their life.

FIRST Tech Challenge Core Values

FIRST asks everyone who takes part in *FIRST* Tech Challenge to uphold the following values:

- We display *Gracious Professionalism*® with everyone we engage with and in everything we do.
- We act with integrity.
- We have fun.
- We are a welcoming community of students, mentors, and volunteers.
- What we learn is more important than what we win.
- We respect each other and celebrate our diversity.
- Students and adults work together to find solutions to challenges.
- We honor the spirit of friendly competition.
- We behave with courtesy and compassion for others always.
- We act as ambassadors for *FIRST* and *FIRST* Tech Challenge.

- We inspire others to adopt these values.

Gracious Professionalism®

FIRST uses this term to describe our programs' intent and is shared with all young people engaging in *FIRST* programs. At *FIRST*, team members help other team members, but they also help other teams.

Gracious Professionalism® is not clearly defined for a reason. It has different meanings to everyone.

Some possible meanings of *Gracious Professionalism* include:

- Gracious attitudes and behaviors are win-win.
- Gracious folks respect others and let that respect show in their actions.
- Gracious Professionals make valued contributions in a way that is pleasing to others and to themselves.

In *FIRST*, *Gracious Professionalism* teaches teams and student participants:

- Learn to be strong competitors, but also treat one another with respect and kindness in the process.
- Avoid leaving anyone feeling as if they are excluded or unappreciated.
- Knowledge, pride and empathy should be comfortably and genuinely blended.

An example of *Gracious Professionalism* is patiently listening to a team's question and providing support despite having several pressing things to do on the day of the event.

In the end, *Gracious Professionalism*® is part of everyday life. When professionals use their knowledge in a graciously and individuals act with integrity and sensitivity, everyone wins, and society benefits.

Watch Dr. Woodie Flowers explain *Gracious Professionalism* in this short video.

The PushBot Guide

There are three versions of the Push Bot. PBv1 (created in 2014) used the NXT and Samantha units for control and communication. PBv2 (created in 2015) was introduced cell phones to replace the NXT Mindstorm and Samantha units. Modern Robotics modules were introduced to replace the HiTechnic controllers. PBv3 (created in 2016) used the same electronics as PBv2, but had a lower center of gravity. PBv4 is being created in 2017 to introduce the Rev Robotics Expansion hub, which can be used to replace the Modern Robotics controllers. The Modern Robotics electronics are still an option, so if you are using those electronics, then refer to the building instructions for PBv2 and PBv3. Use the latest FTC SDK for programming regardless of the electronics in use.

The PBv2 and PBv3 robots are being revised to use the REV expansion hub instead of the Modern Robotics modules for the 2017 season. The revised versions will be known as PBv4a (counterpart of PBv2 - reaches higher with its arm and has a higher center of gravity) and PBv4b (counterpart of PBv3 - reaches further horizontally with its arm and has a lower center of gravity).

Refer to the game rules to determine which version is desired. If the season's game has a goal that requires reaching high objects/goals, then PBv4a would be desired. If the season's game has a ramp onto which the

robot must drive, then build PBv4b. This document contains the hardware and wiring instructions to build PBv4b.

The drawings in this document were generated using Creo Parametric Computer Aided Design (CAD) software. CAD software is used to design an object on a computer. By designing on the computer first, the design can be tested (through the use of the CAD software) to ensure everything will work together before actual construction. The Creo software is available for free to *FIRST* teams for use in designing robots. The CAD drawings are color coded to help identify parts. Refer to the table below when performing a step to clarify and question that arises while reading this document.

Remember, the PushBot guide is just a starting point for teams. Always keep improving your design and continue learning throughout the season.

CAD Coloring Legend		
Pitsco Part Number	Part	Color
39098	5/16" socket head cap screw	red
39094	keps nut	blue
39111	3/8” button head cap screw	green
39097	1/2” socket head cap screw	yellow
39089 & 39090	motor mount/gear hub spacer screw	orange

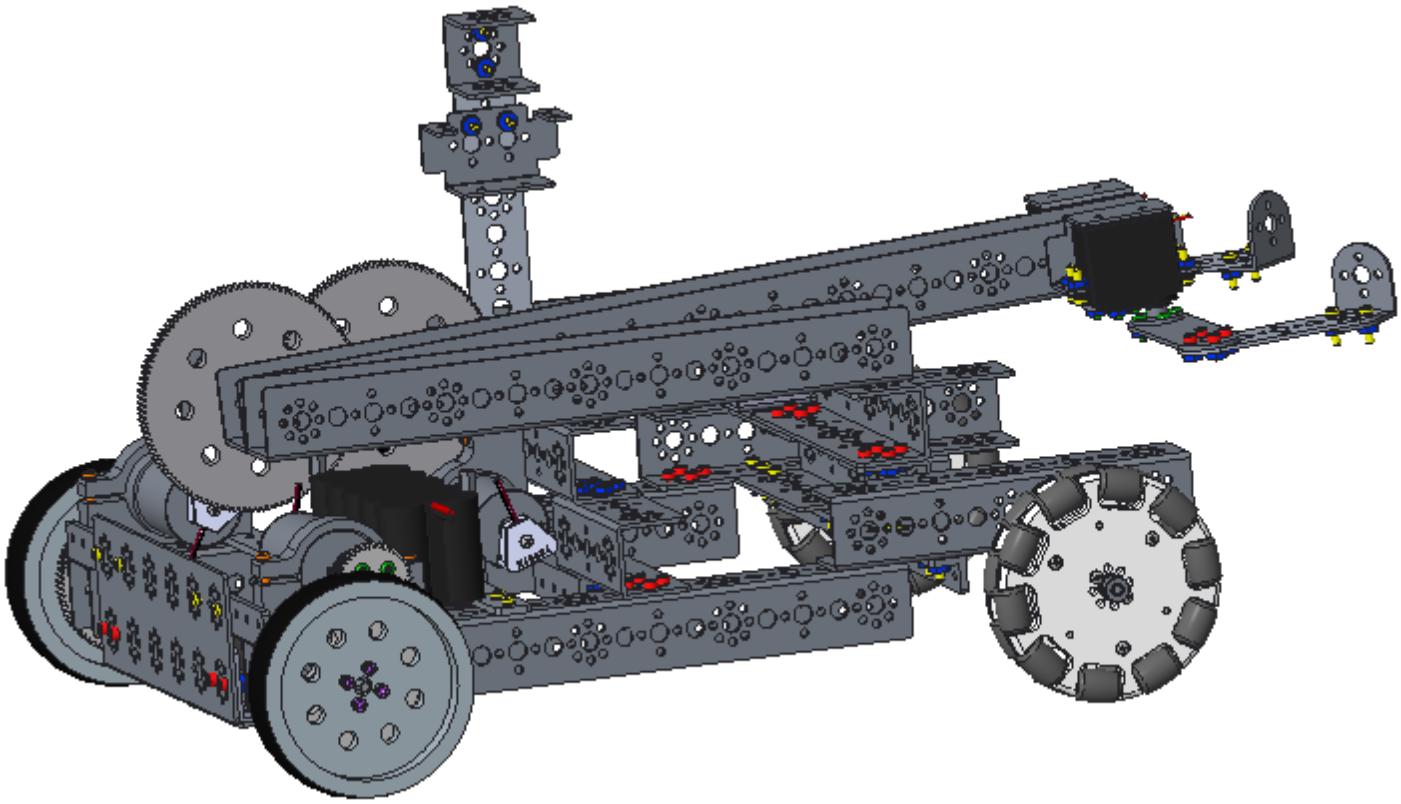

The above image shows the left side of the robot.

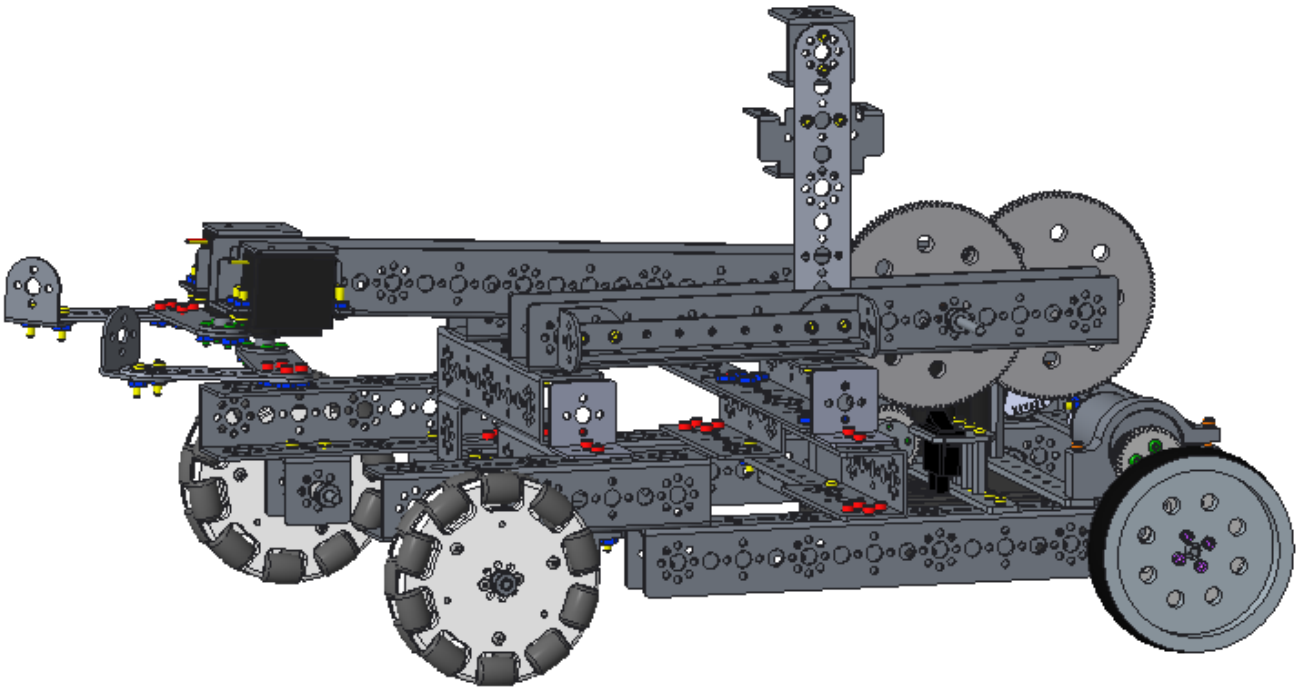

The above image shows the right side of the robot.

Chassis

This section will outline the construction of the chassis, which uses only the parts in the TETRIX Kit of Parts. Only the tools included in the Kit of Parts will be needed to build the robot. Make sure that set screws are installed in all of the axle hubs, motor hubs, and axle collars. If these parts are unfamiliar, then refer to the legend provided in the Kit of Parts. Make sure that all assemblies are square. It is hard to drive a crooked robot straight!

PBv4b uses drive wheels on the front of the robot, because that is where the most weight is. This weight is needed to help the wheels grip the surface better. Omni wheels are on the back of the robot, which allows the robot to turn more easily. The omni wheels can slide sideways with very little friction due to the rollers.

Note that when the arm is stowed, it appears that front and back of the robot are reversed. Keep in mind that the arm can reach further the ground on only one side - the front.

PBv4b uses two DC motors to power the drive wheels. It uses one DC motor to raise and lower the arm. The Kit of Parts includes an additional motor, which can be retained as a spare motor (in the event one of the three fail) or it can be used to power another mechanism, such as a sweeper for balls or a lifter for blocks.

For most of the steps in this section, the top image shows the necessary parts; the lower image shows the completed assembly.

Constructing the Chassis

Step 1: Left Chassis Rail

288 mm channel (1), 160 mm channel (1), 32 mm channel (1), 5/16" socket head cap screws (4), 1/2" socket head cap screws (2), keps nuts (6)

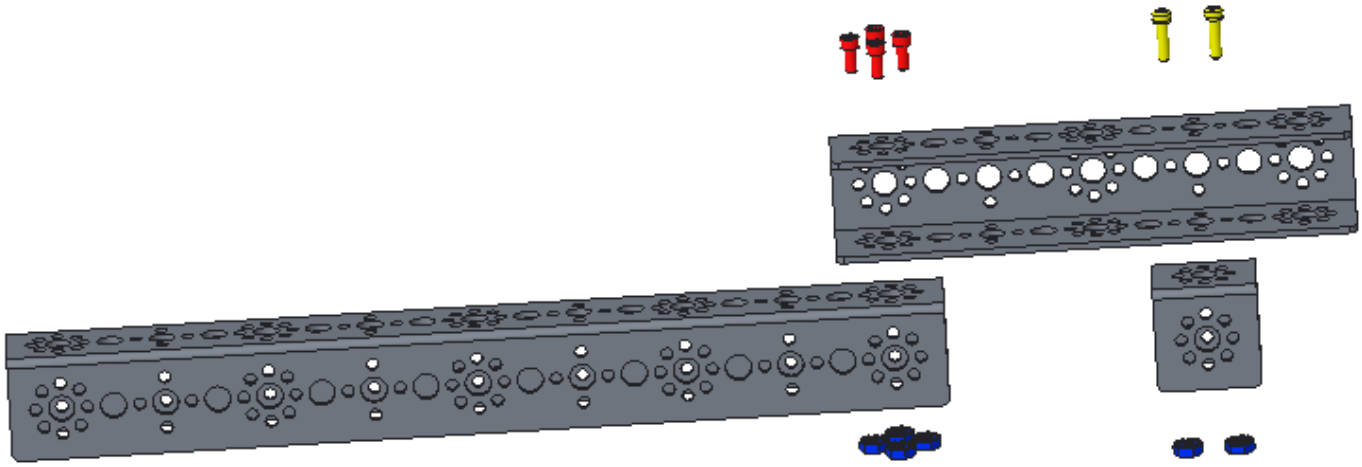

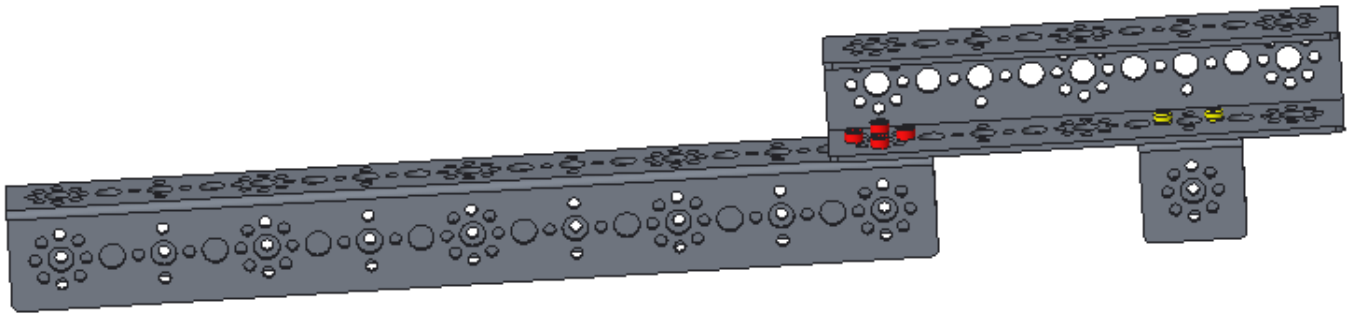

Step 2: Right Chassis Rail

32 mm channel (1), 160 mm channel (1), 288 mm channel (1), 1/2" socket head cap screws (2), 5/16" socket head cap screws (4), keps nuts (6)

It is a mirror image of the left chassis rail assembly built in the previous step.

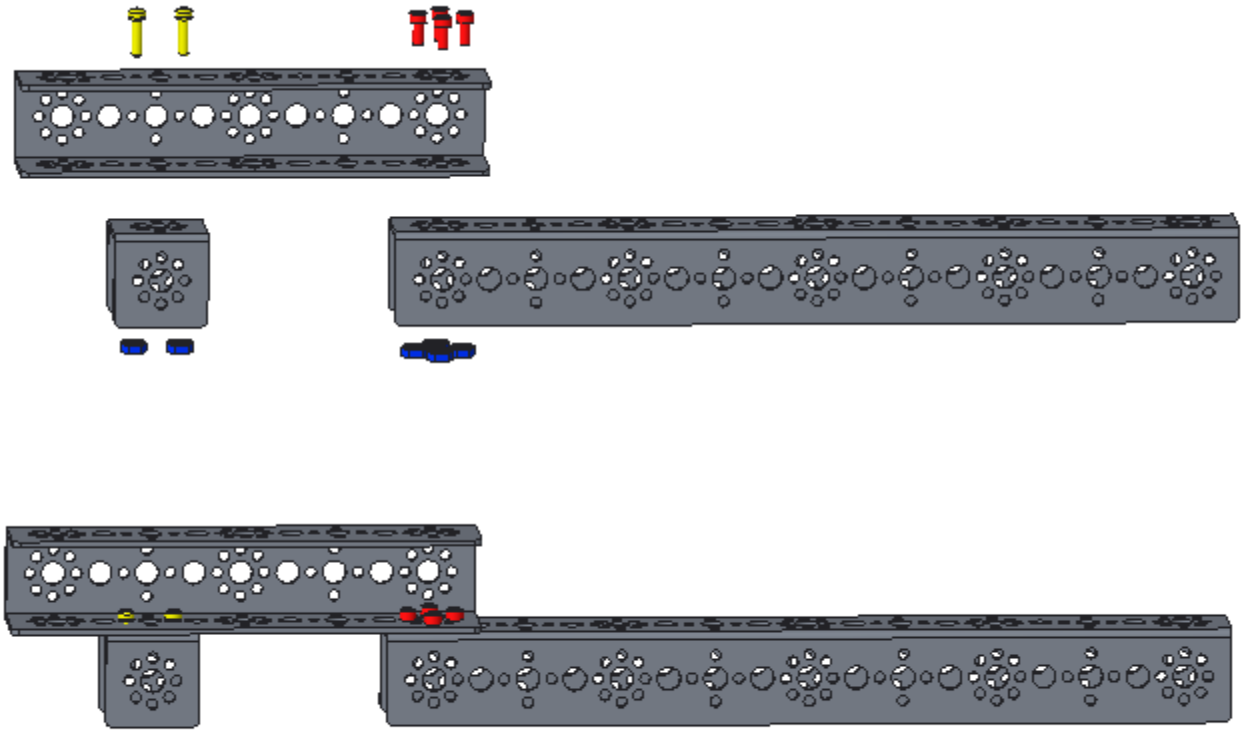

Step 3: Cross Bar Assembly

160 mm channel (1), 96 mm channels (2), 5/16" socket head cap screws (8), keps nuts (8)

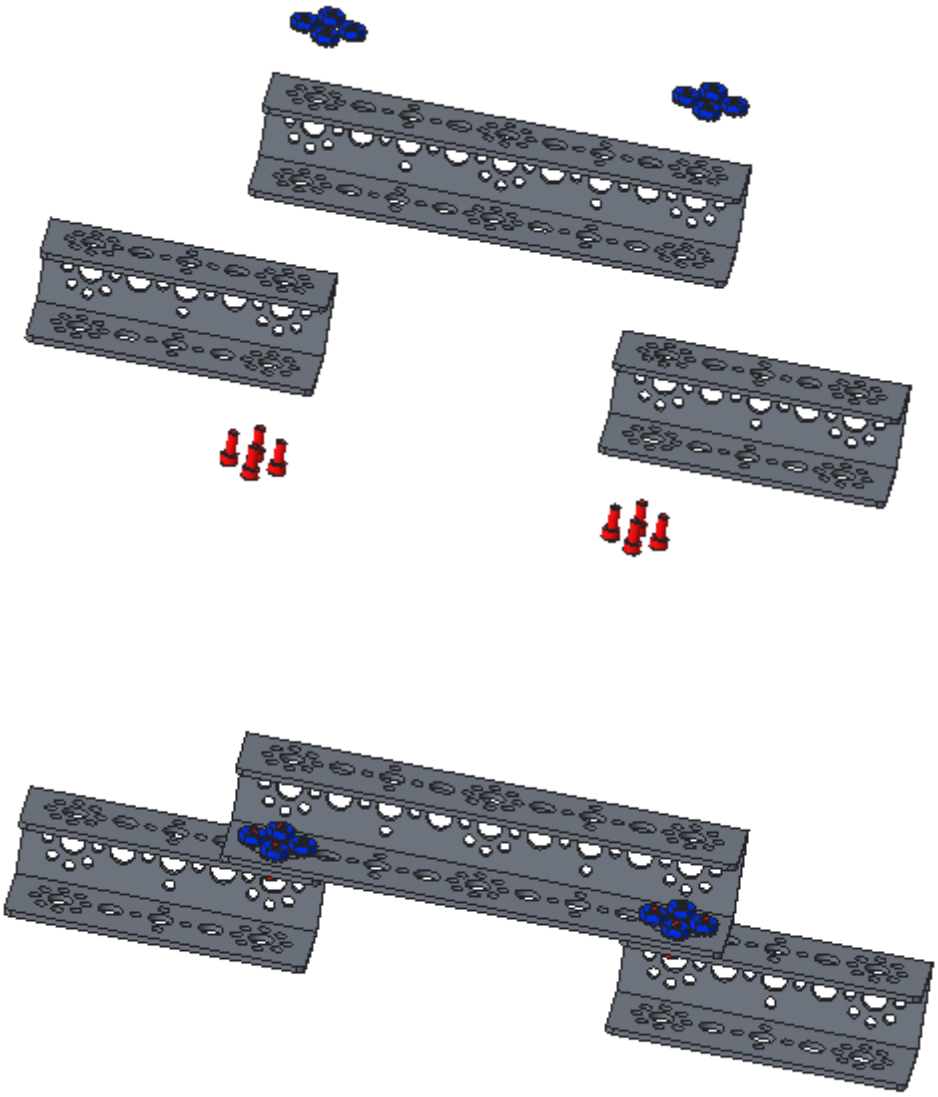

Step 4: Connecting the Left and Right Rail Assemblies

right rail assembly, left rail assembly, cross bar assembly, 5/16" socket head cap screws (8), keps nuts (8)

In the image, the front of the robot is on the right. The left rail assembly is on the top and the right rail assembly is on the bottom.

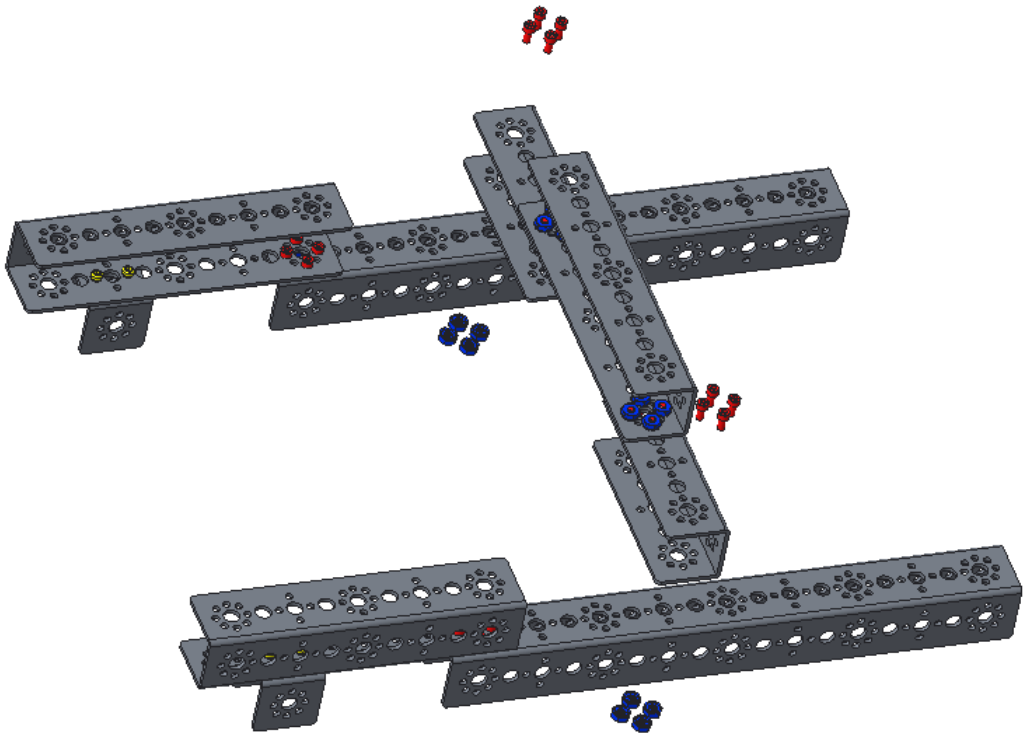

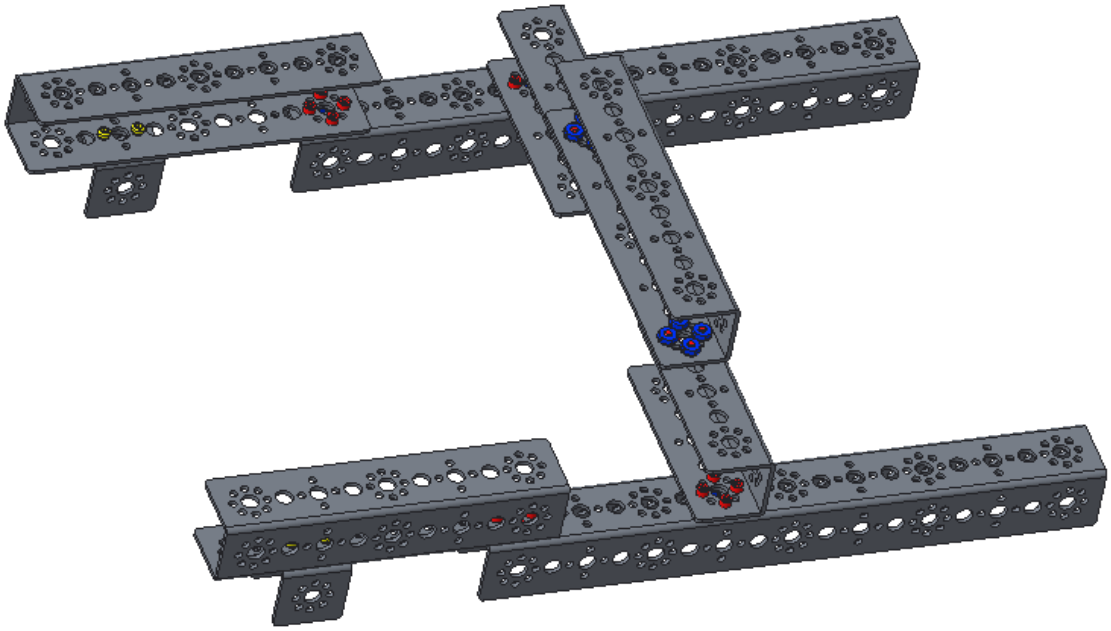

Step 5: Additional Cross Braces

assembly from the previous step, 288 mm angle (1), 288 mm flat bar (1), 1/2" socket head cap screws (9), 2” stand-off (1), keps nuts (8)

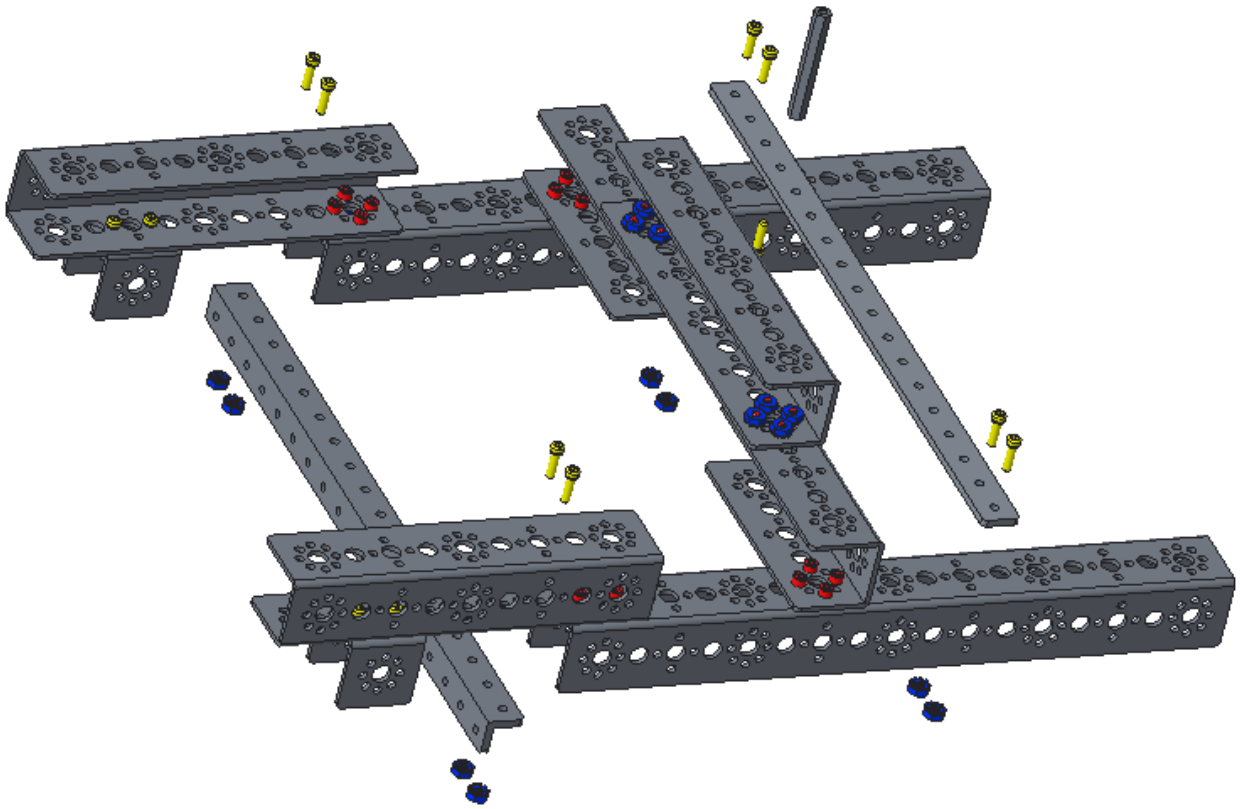

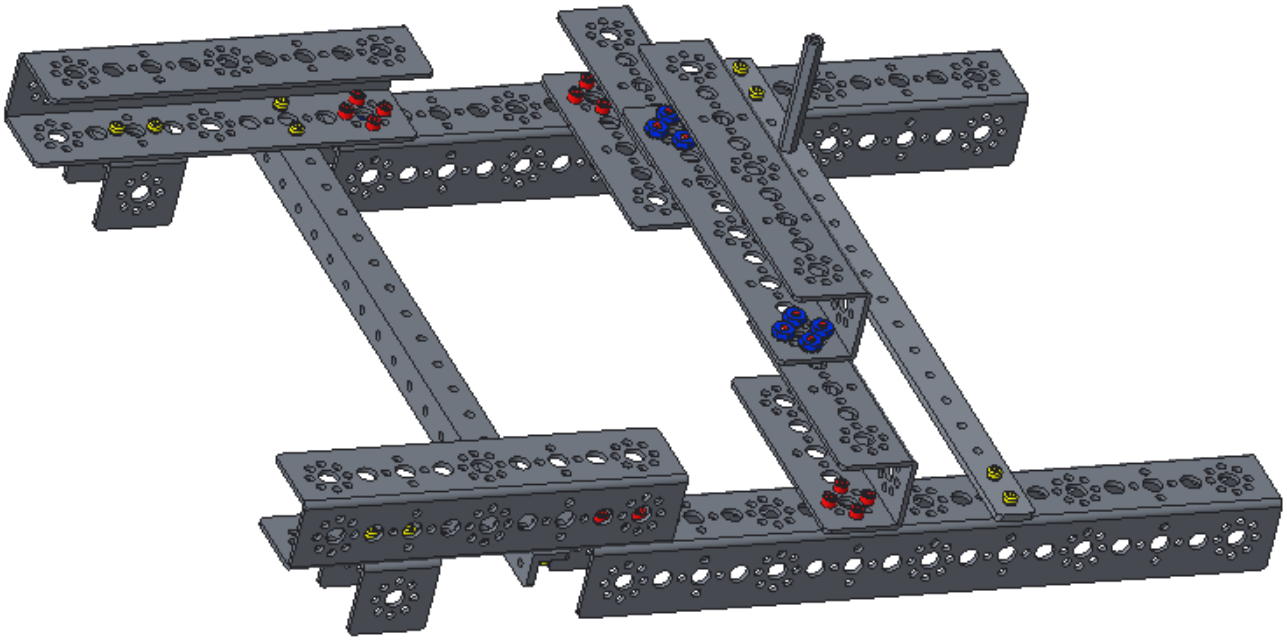

Step 6: Tower Support

assembly from the previous step, 160 mm channel (1), 32 mm channel (1), 96 mm channel (1), 5/16" socket head cap screws (8), 1/2" socket head cap screws (4), keps nuts (12)

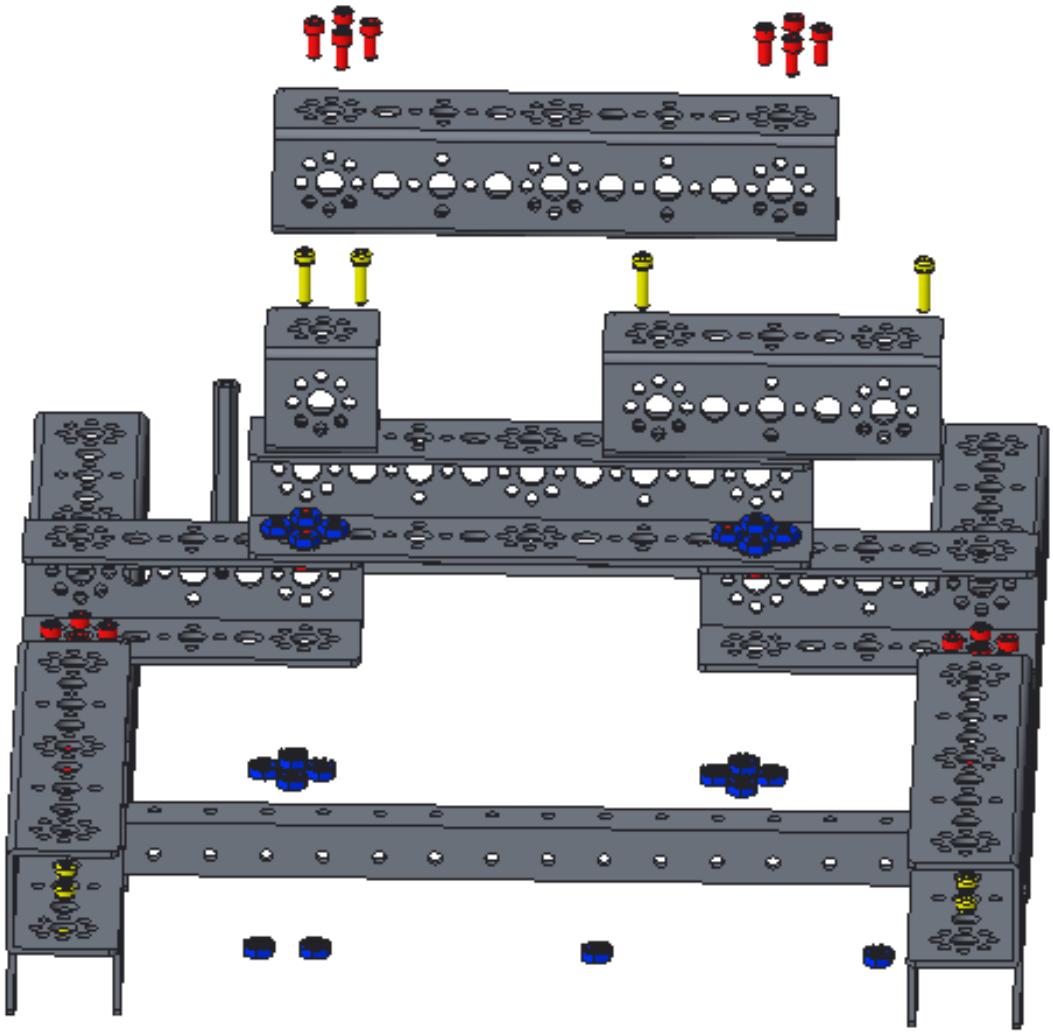

The completed assembly is on the next page.

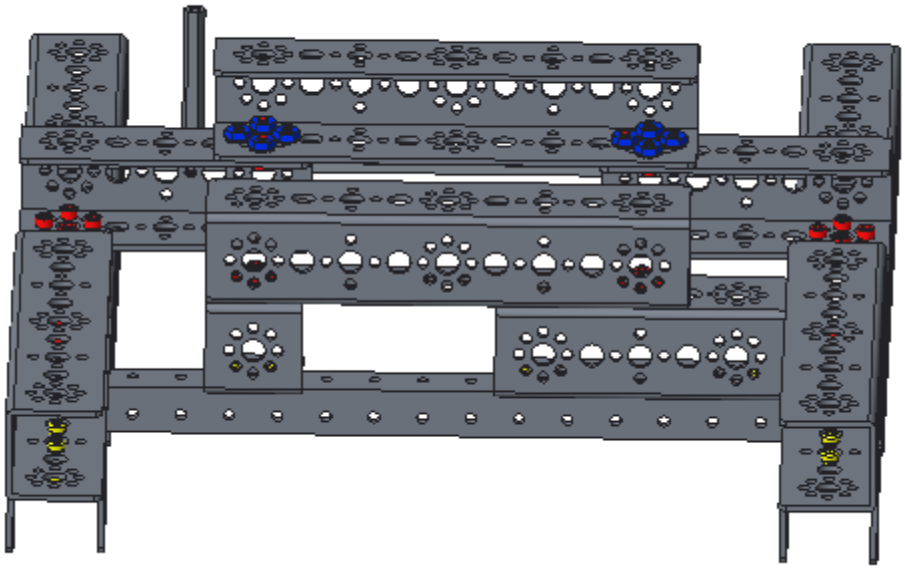

In the above image, the robot is right side up and the front of the robot is at the bottom of the image.

In the below image, the robot is upside down. The front of the robot is at the bottom of the image.

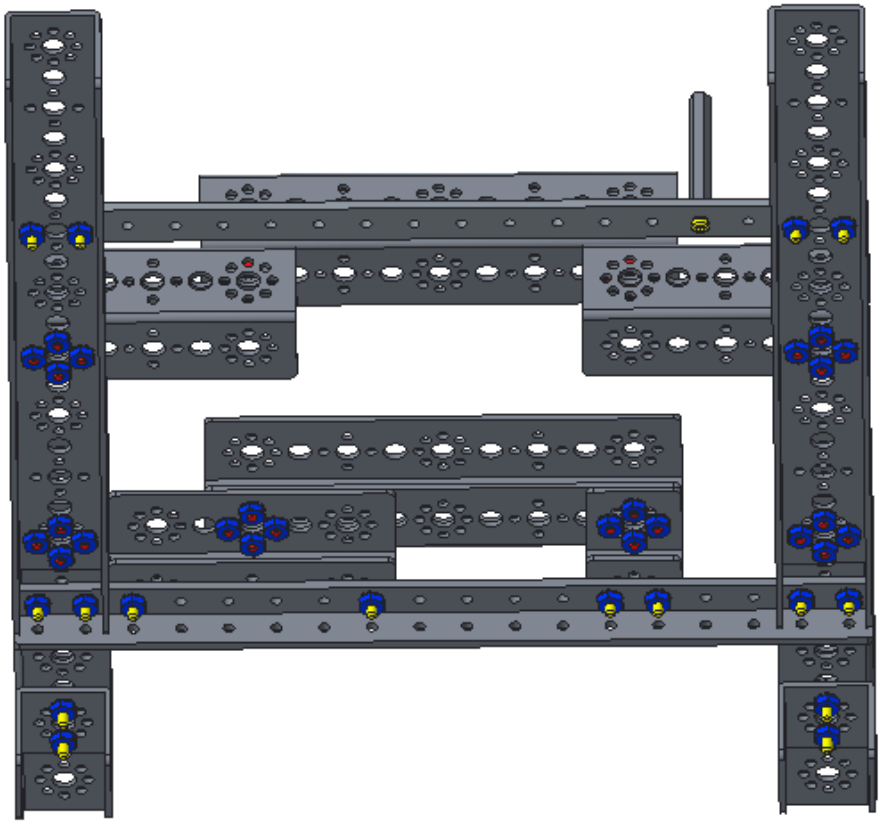

Building Drive Wheels
Make two.

Step 1: Drive Wheel Assembly
4" wheel (1), gear hub spacer (1) with included screws (4), 80 tooth gear (1), axle hub (1), and 100 mm axle (1)

Order from left to right: gear hub spacer screws, wheel, gear hub spacer, gear, axle hub

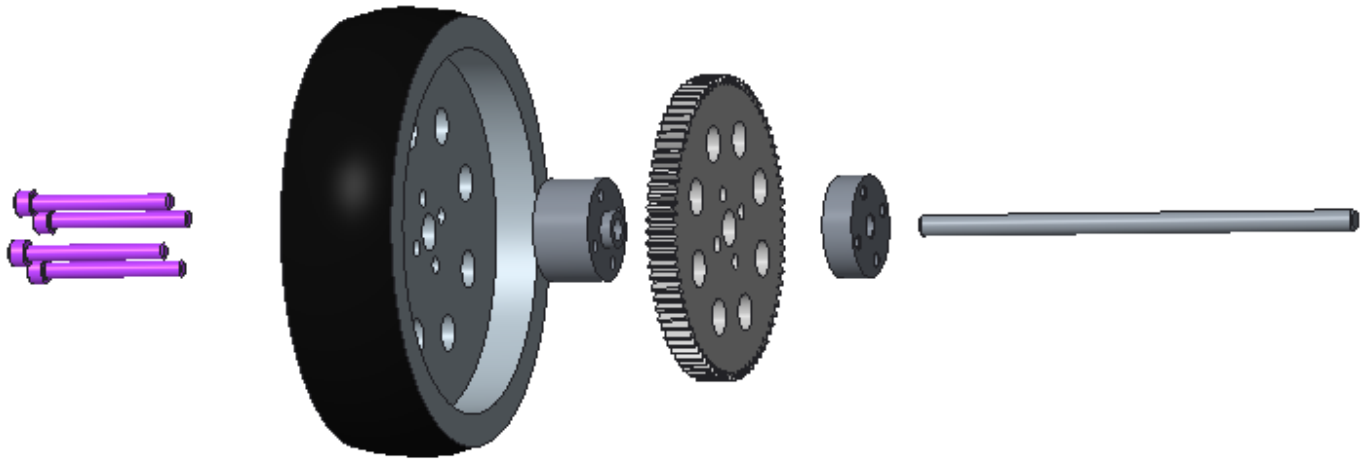

The above image shows only one wheel. Make two.

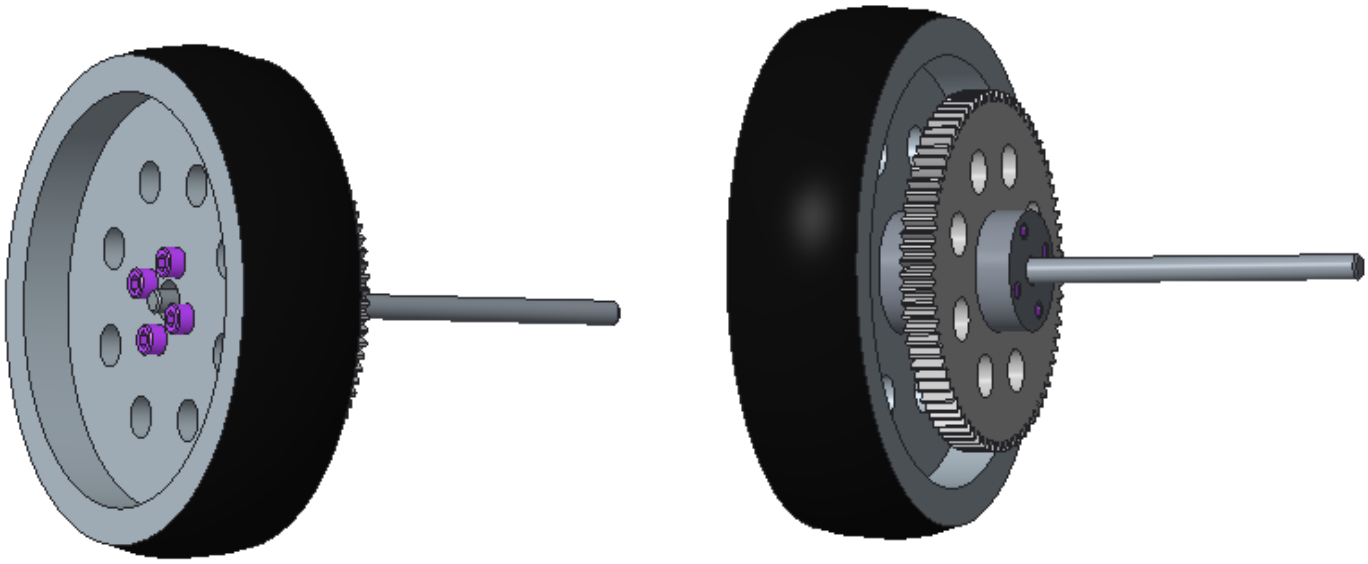

Step 2: Add Drive Wheels to the Frame

assemblies from the previous step (2), 1/8" axle spacers (4), axle collars (2), 11 mm bronze bushings (4)

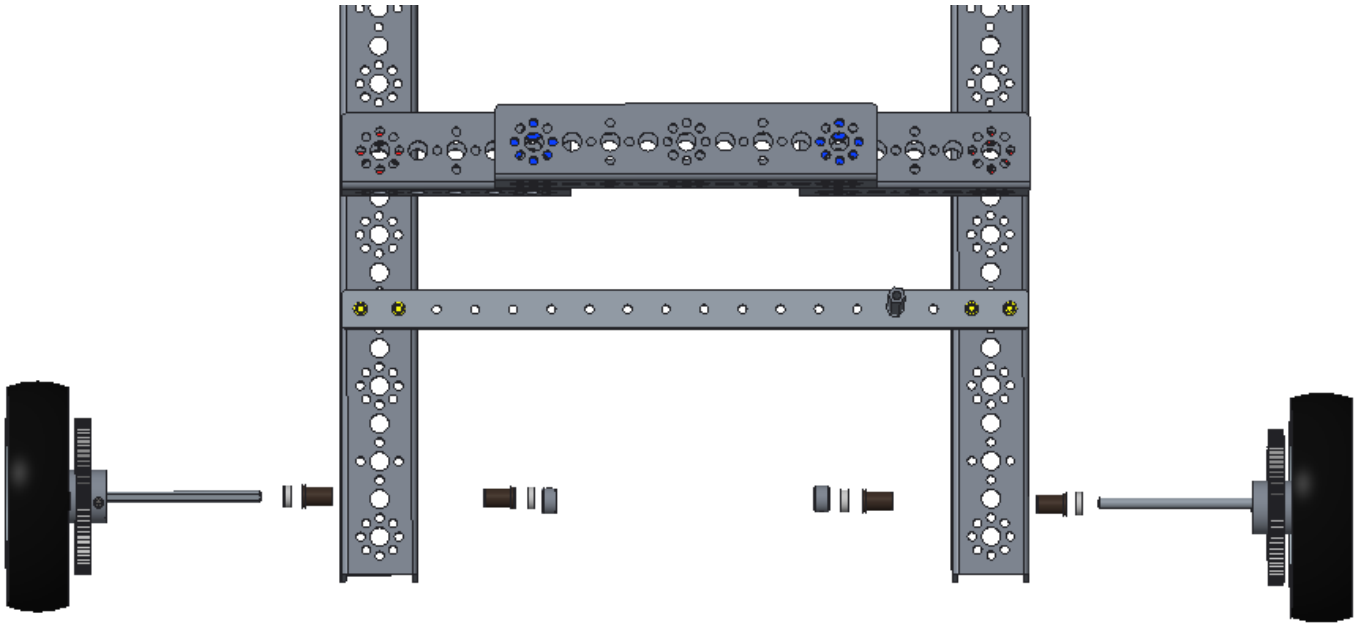

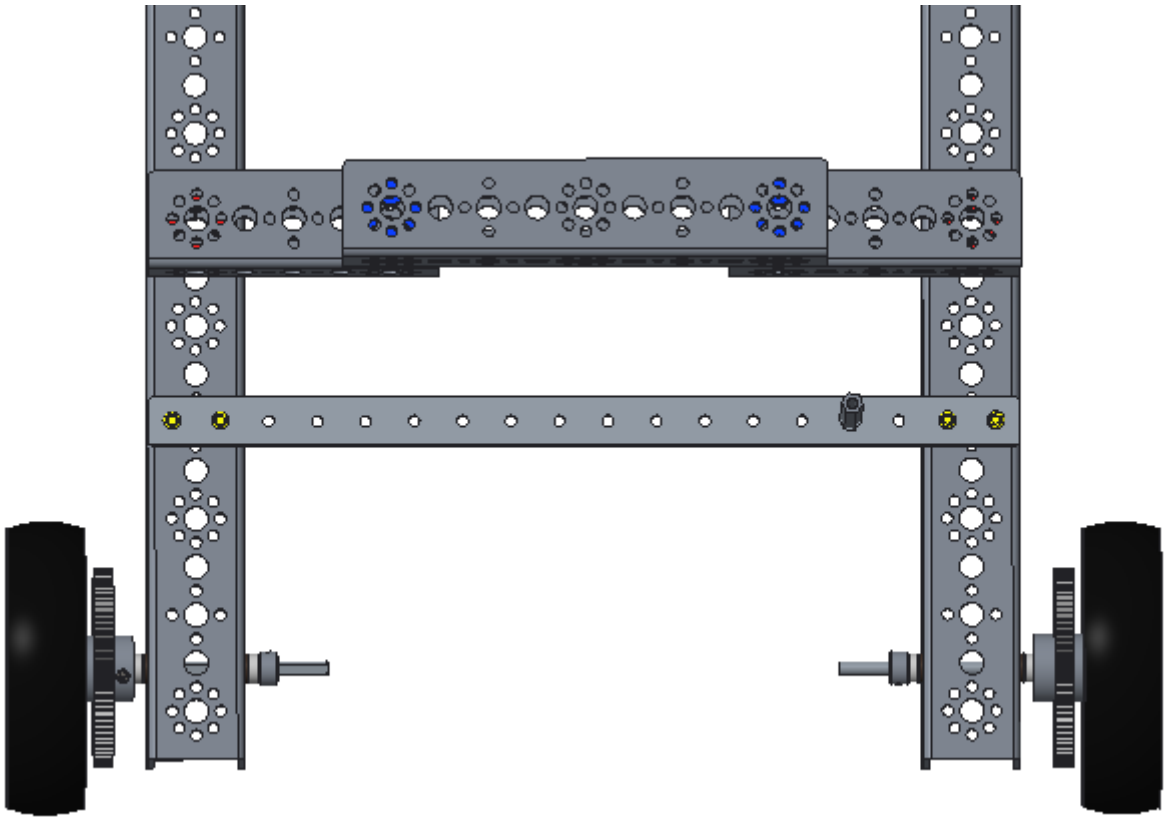

Adding Omni Wheels
Make two.

Step 1: Omni Wheel Assembly
4" omni wheel halves (2), joining ring (1) with included screws (4)

Assemble according to the instructions that come in the omni wheel pack.

Note the screws on one wheel are in opposite holes from the screws on the other wheel.

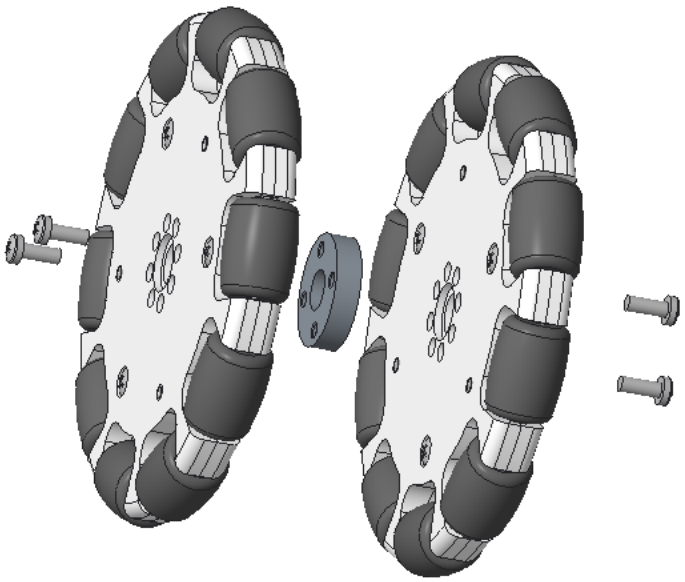

The above images shows only one wheel assembly. Make two.

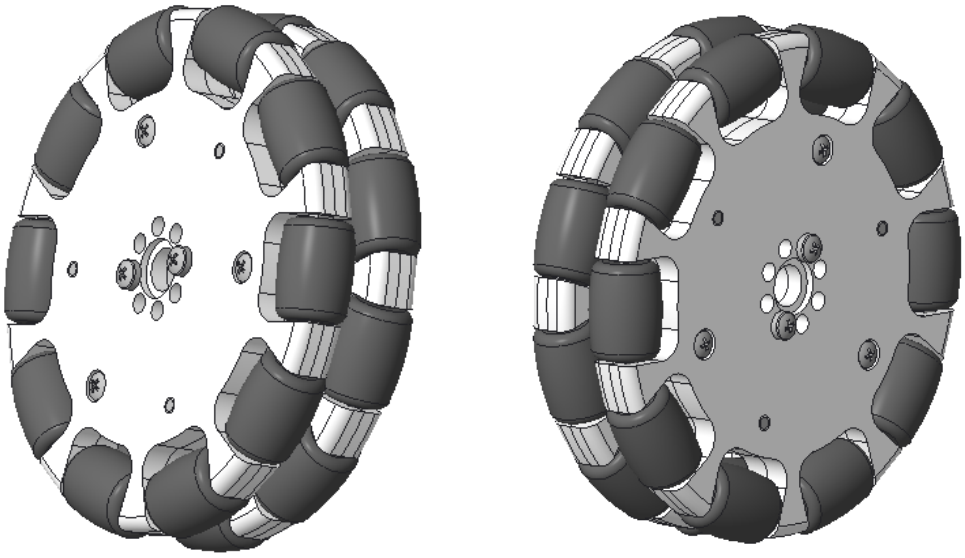

Step 2: Add Bronze Bushings

assemblies from the previous step (2), 11 mm bronze bushings (4)

Sometimes the bronze bushings are hard to insert. To make this easier, put a bronze bushing on a wheel assembly from the drive wheel assembly section. Slide the omni wheel down the axle and press it against the wheel assembly. A video is available that shows this trick. Visit https://www.facebook.com/322705934572847/videos/506108019565970/.

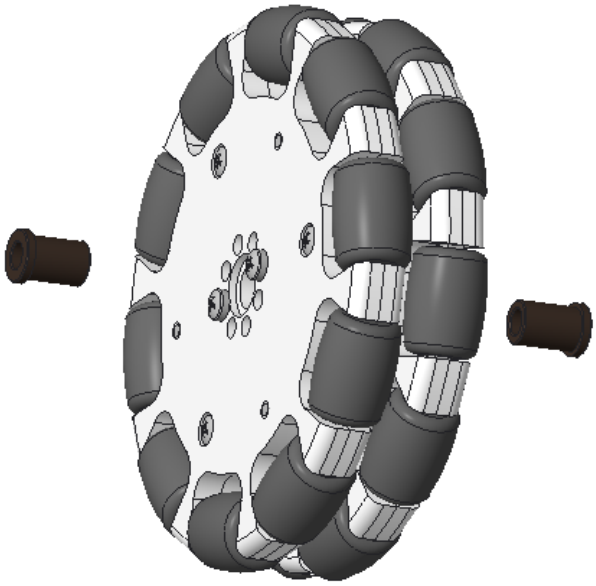

The above image shows only one wheel assembly. Perform this step on both assemblies.

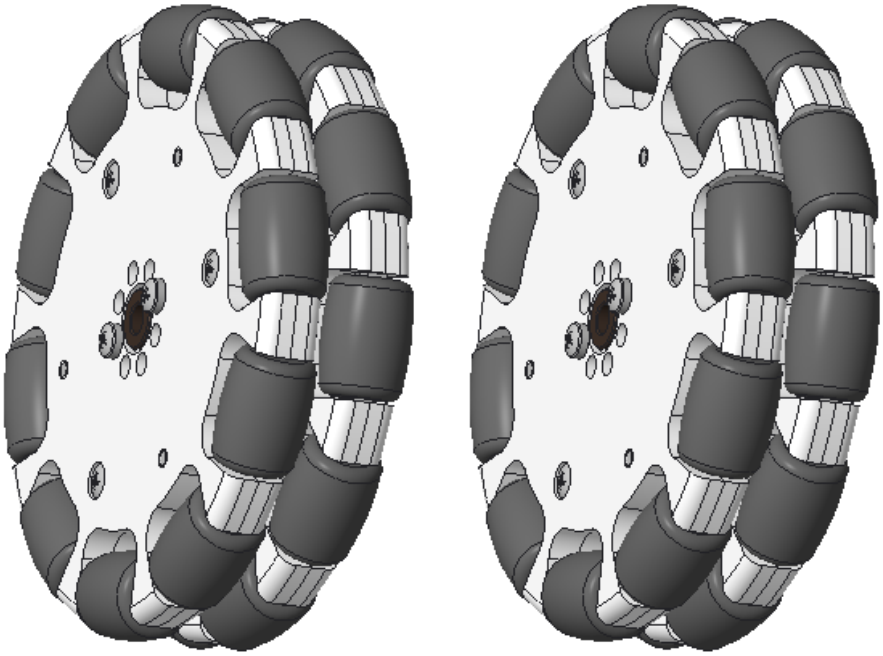

Step 3: Attach Omni Wheels to Chassis

chassis, omni wheel assemblies (2), 1/8" axle spacers (4), 3/8" axle spacers (2), axle set collars (4), 11 mm bronze bushings (4), 100 mm axles (2)

Order from the outside in: axle set collar, 1/8” axle spacer, omni wheel assembly, 1/8" axle spacer, 11 mm bronze bushing, channel, 11 mm bronze bushing, 3/8" spacer, axle set collar

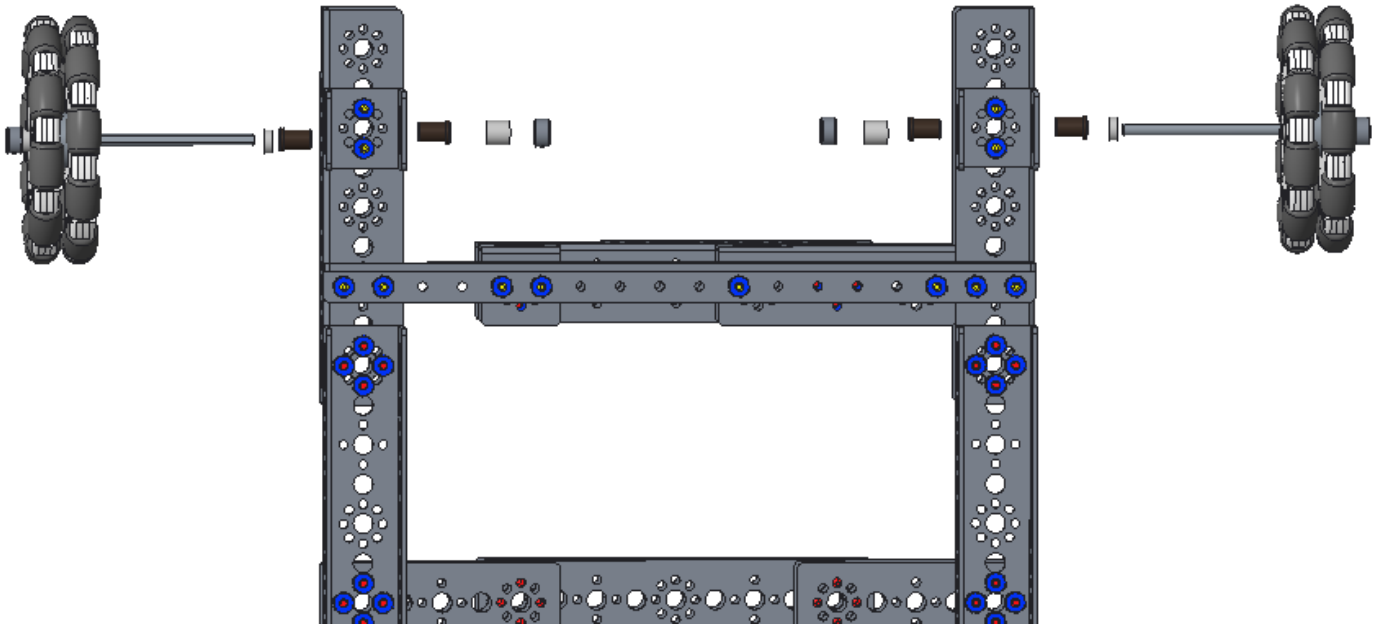

The front of the robot is at the bottom.

The image below shows only the left wheel. The right wheel is a mirror image.

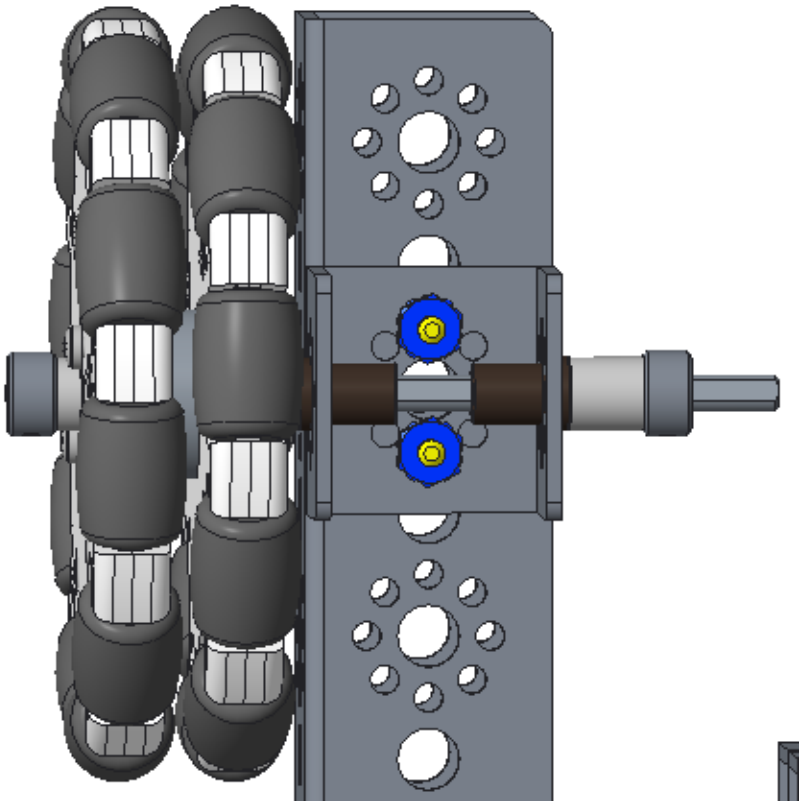

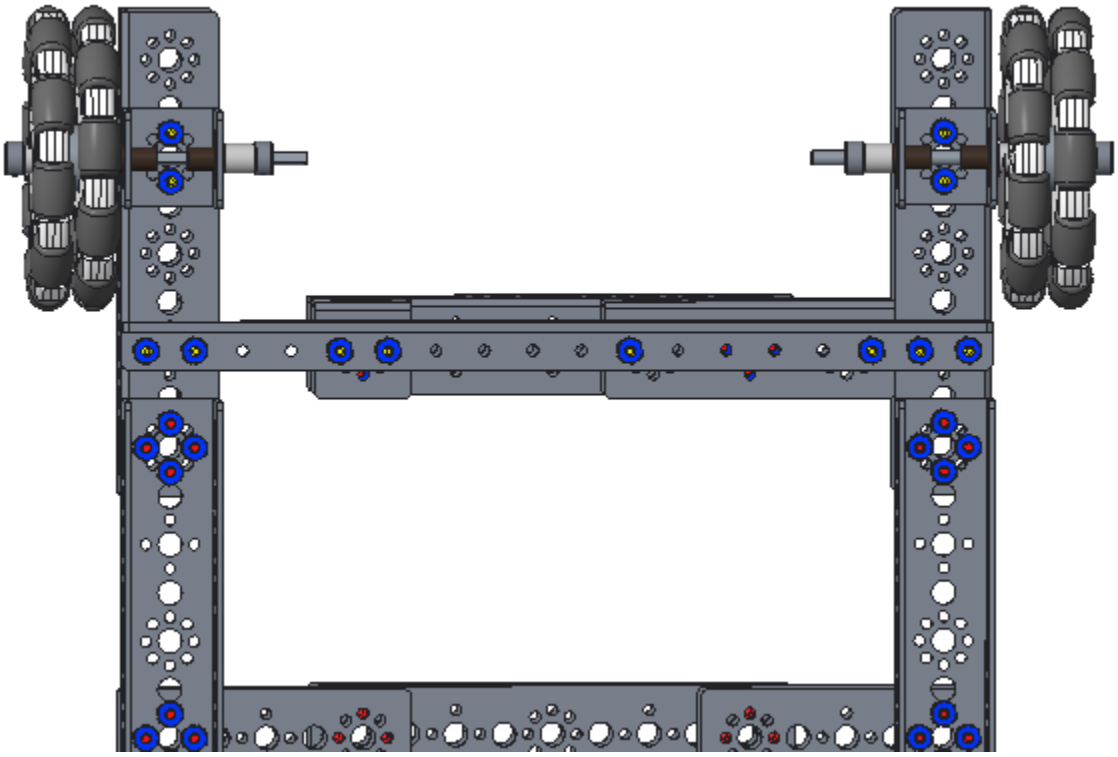

The omni wheels are mounted to the back of the robot.

Adding the Arm Motor

Step 1: Motor Brace

chassis, 144 mm angle (1), 1/2” socket head cap screws (2), keps nuts (2)

Note that parts of the chassis (the left chassis rail and the front 288mm bar) have been hidden in these images.

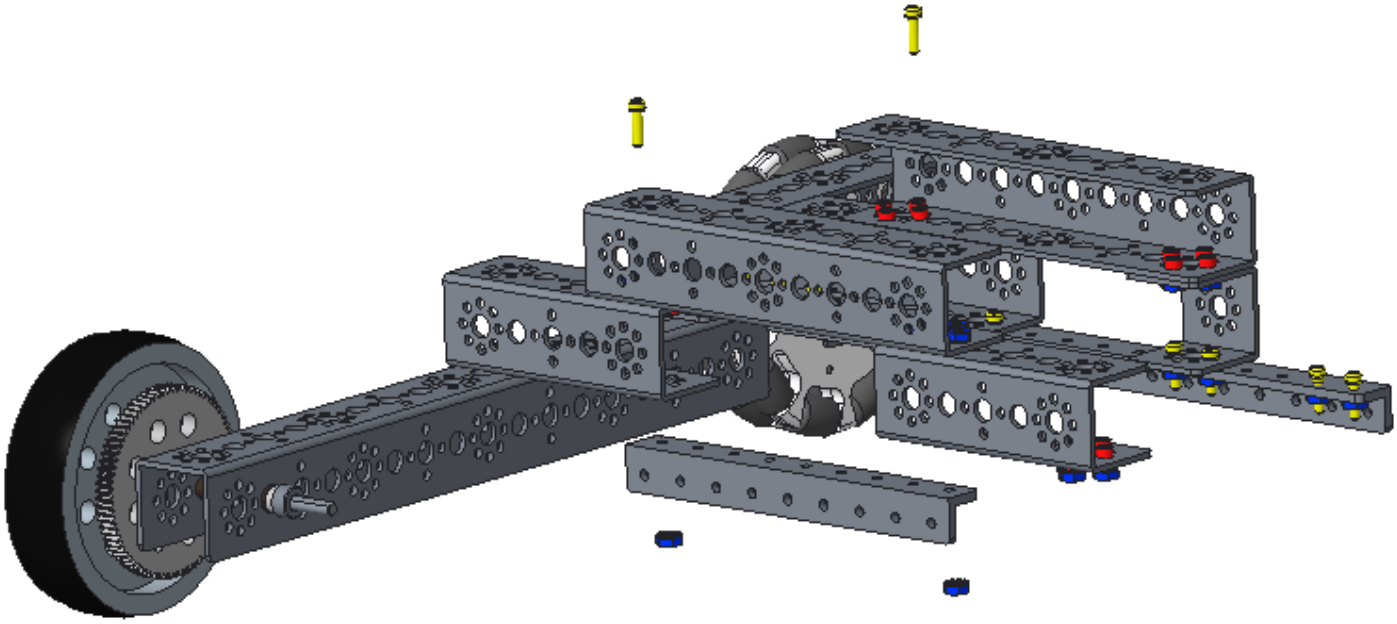

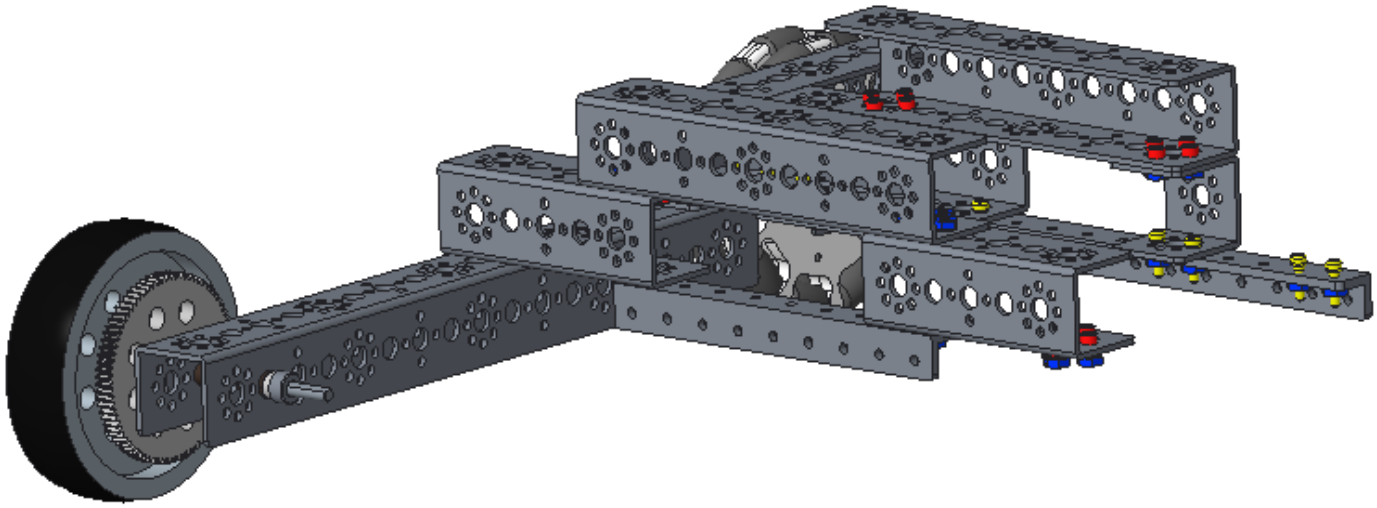

Also note that the angle is not centered. It mounts closer to the left chassis rail than the right chassis rail. The RIGHT chassis rail is shown in this image; remember that the drive wheels are on the front of the robot.

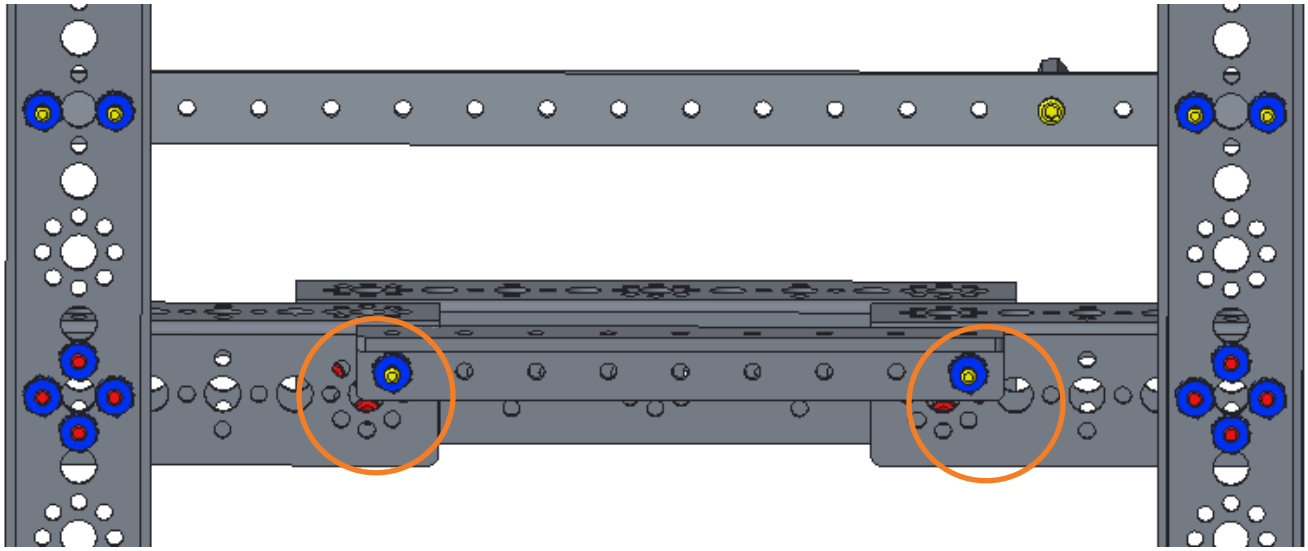

Note that the bolts are through the hole that is one down and to the right of the top hole. This allows the angle to be flush with the front face of the channel.

Step 2: Motor Mount

chassis, motor mount (1) and the bolts (2) and nuts (2) that come in the motor mount kit

Note: Do not tighten the lower motor mount bolt (the side with the gap) until the motor has been inserted. When this bolt is tightened, it clamps the motor in place.

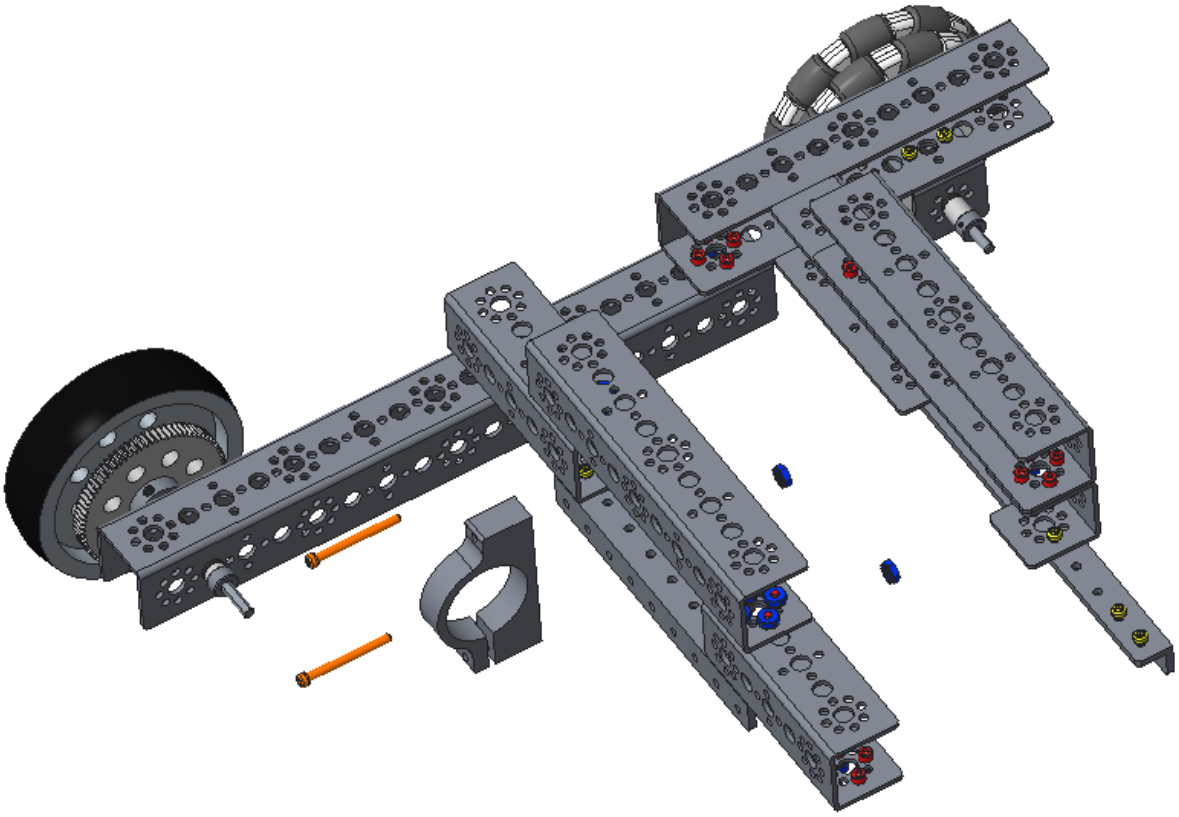

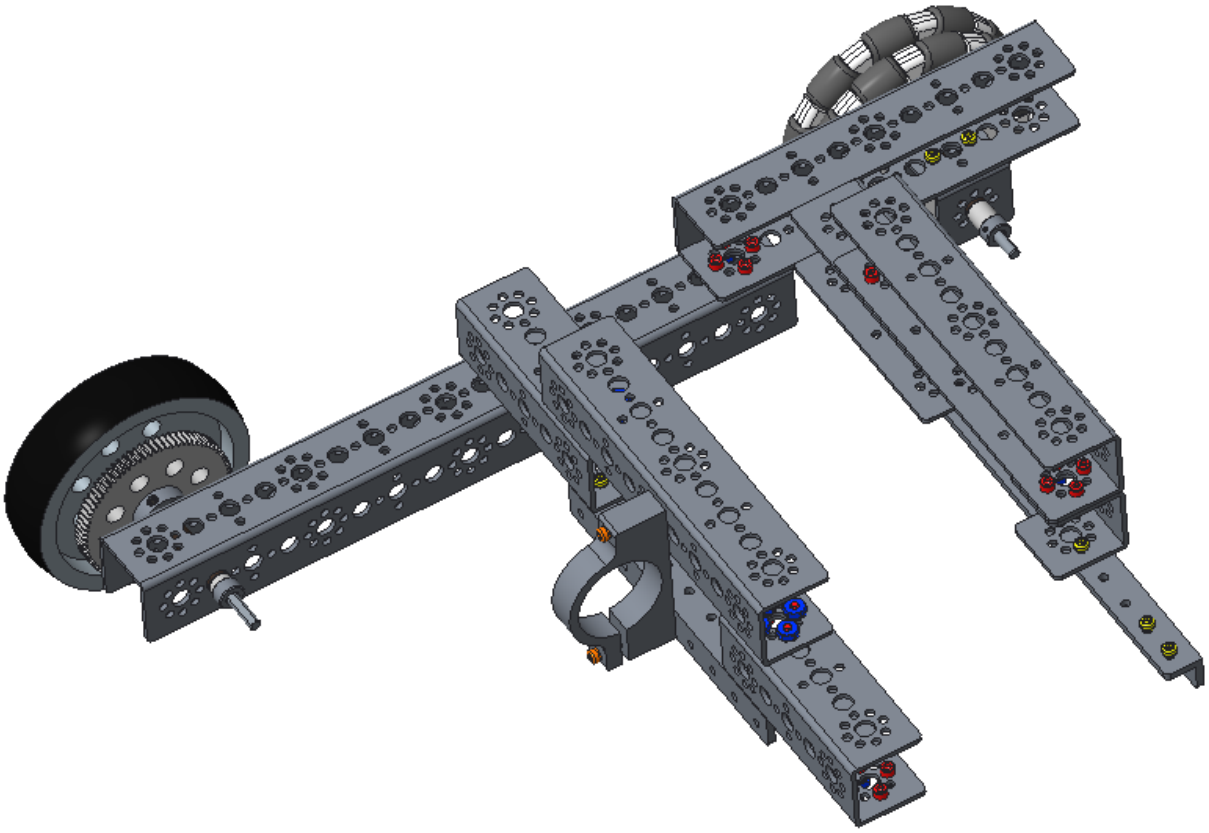

This is a view from the “inside of the robot” (underneath the back wheels looking towards the front of the robot). Note that the motor mount is not in the top hole. From the inside, it will be down and to the left. From the front of the robot, it will be down and to the right.

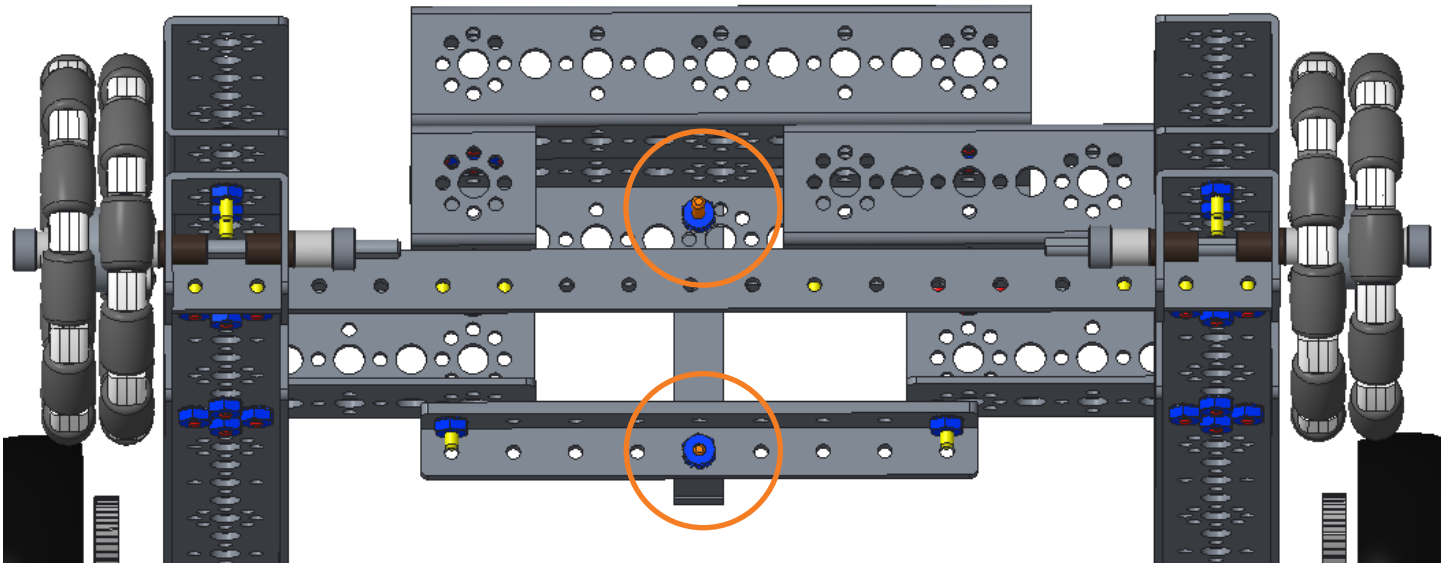

Step 3: Motor and Gear Assembly

motor hub (1) with its included set screw (1), 40 tooth gear (1), DC motor (1), 3/8” button head cap screws (4)

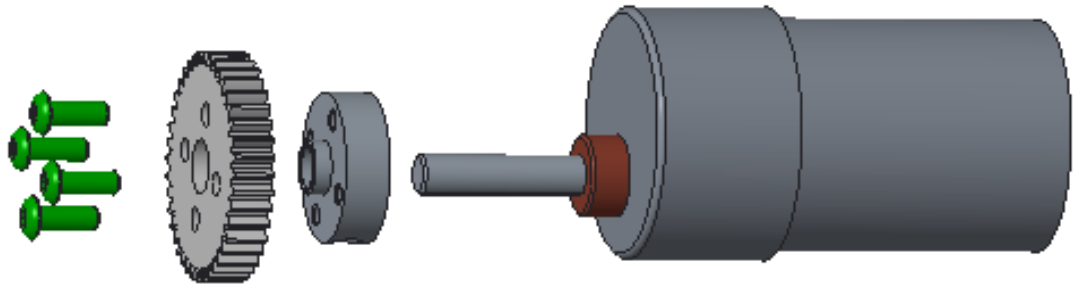

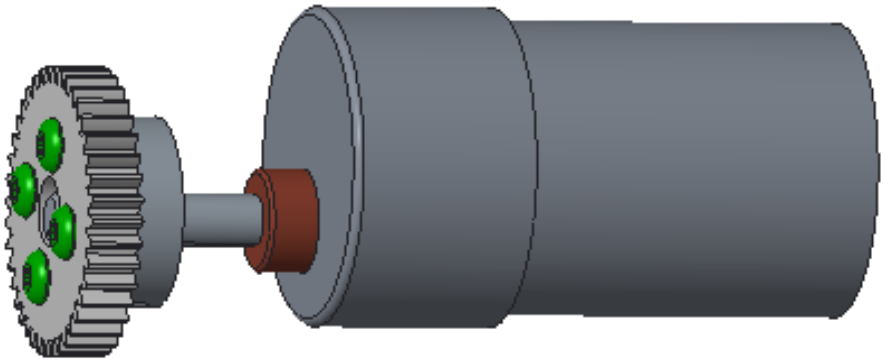

Step 4: Mounting the Motor

chassis, assembly from the previous step

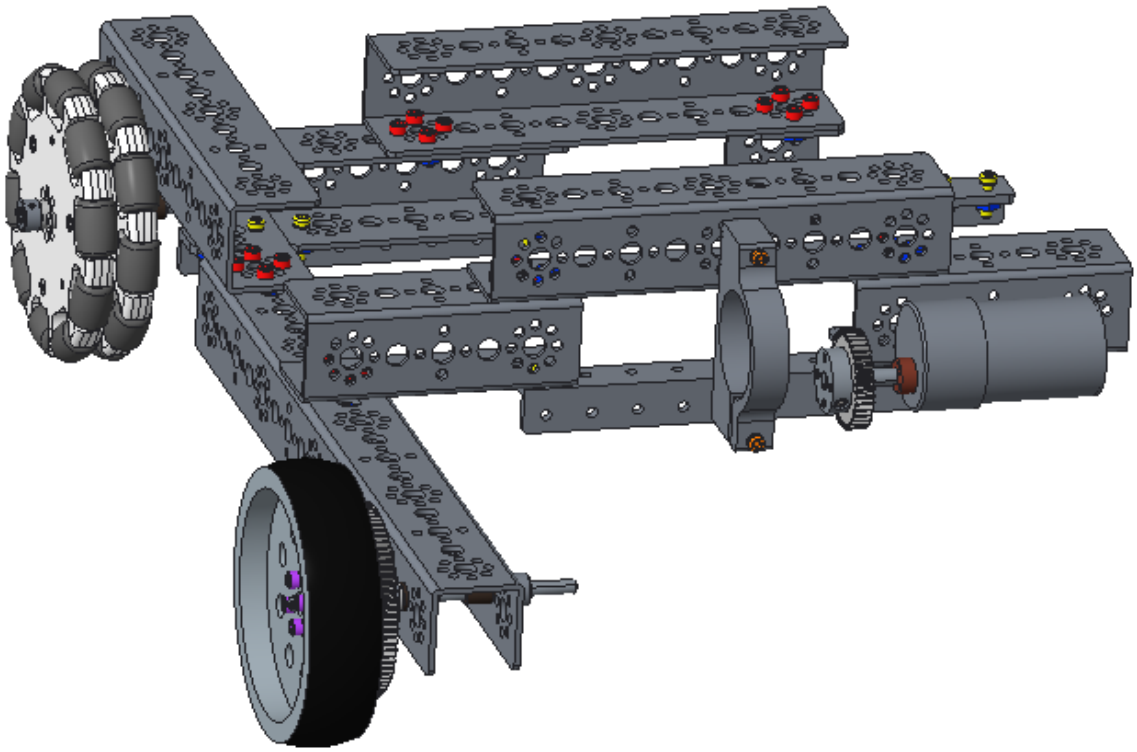

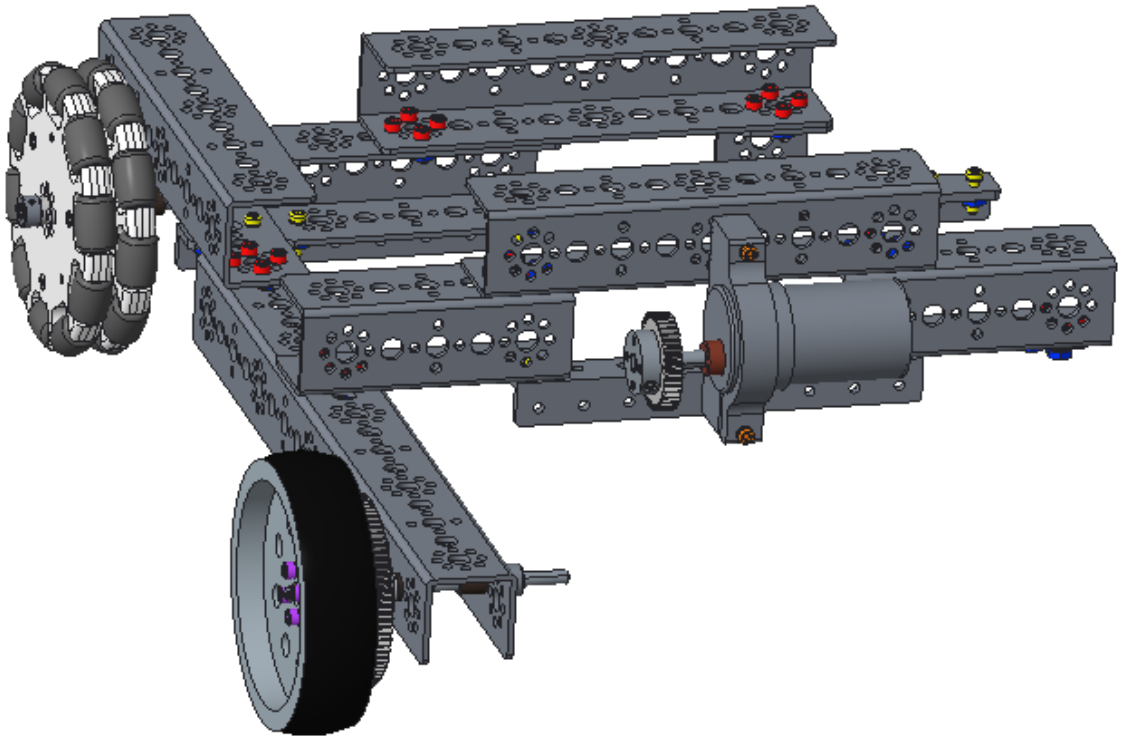

Adding the Arm Rails

Step 1: Arm Support Rails

chassis, 288 mm channels (2), 1/2” socket head cap screws (4), 5/16” socket head cap screws (4), keps nuts (8)

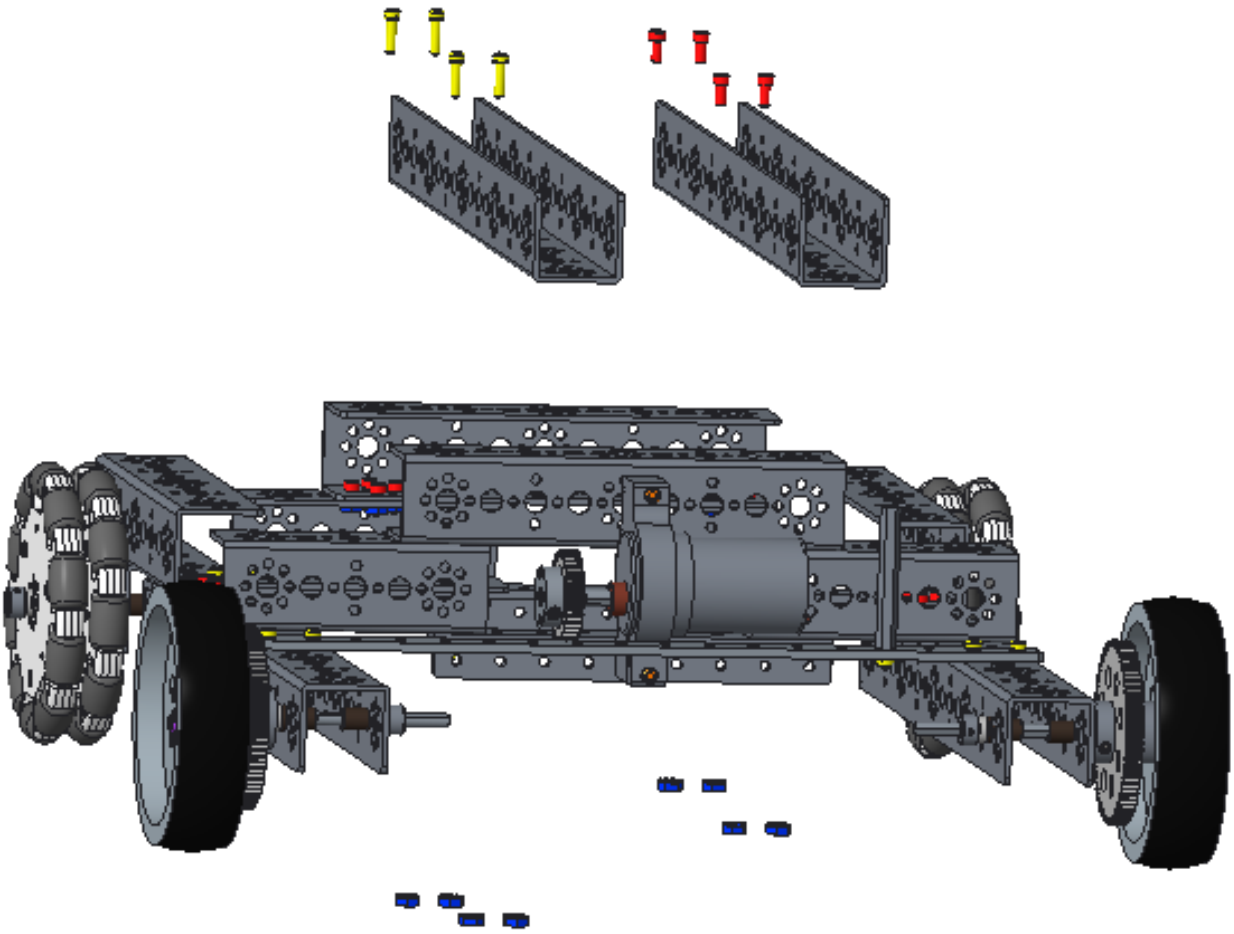

The front of the robot is at the bottom of the image.

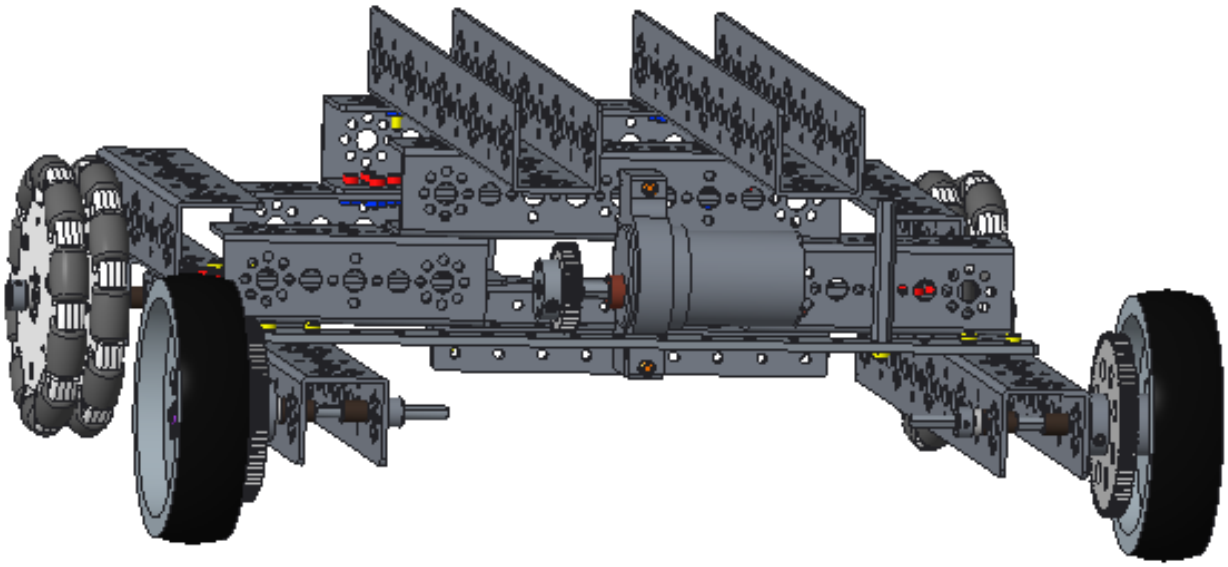

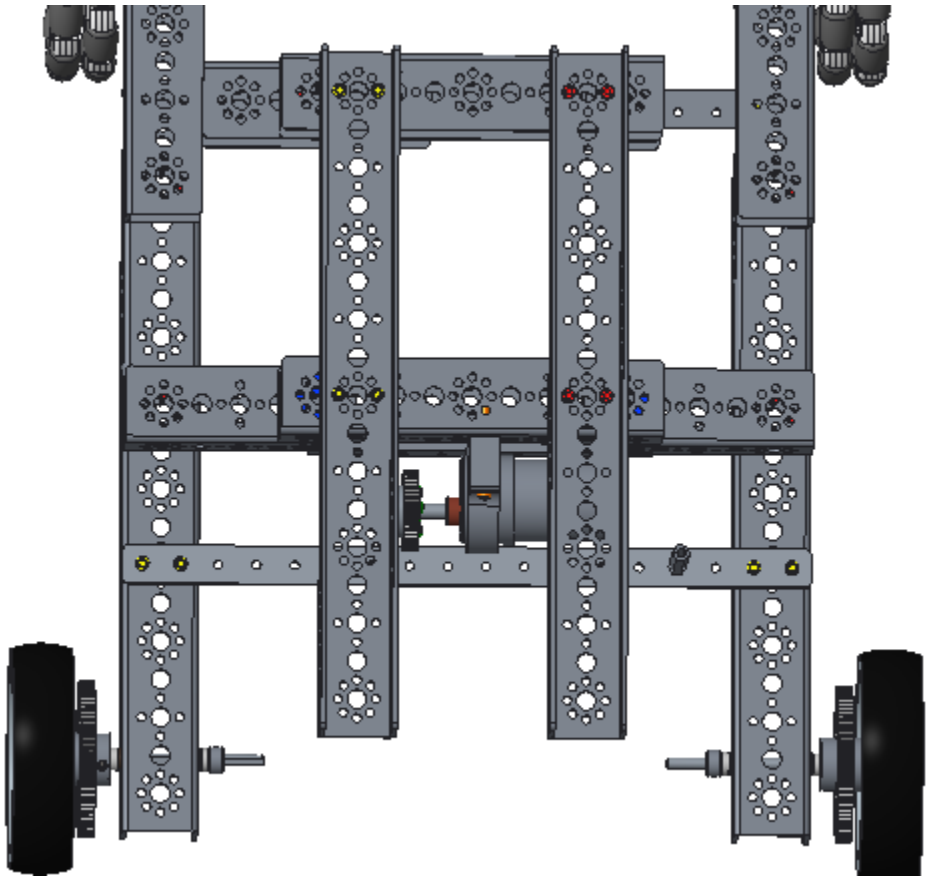

The above image shows the view from the top of the robot.

Adding the Drive Motors

Step 1: Drive Wheel Motor Mounts

chassis, motor mounts (2) and the bolts (4) and nuts (4) that come in the motor mount kit, 288 mm flat bar (1), 288 mm angle (1), 2” stand-off (1)

Note: Do not tighten the motor mount bolts that control the clamp (i.e. the gap on one side of the mount) until the motors have been inserted, which happens at the end of this section. When this bolt is tightened, the motors can’t be inserted into the mount.

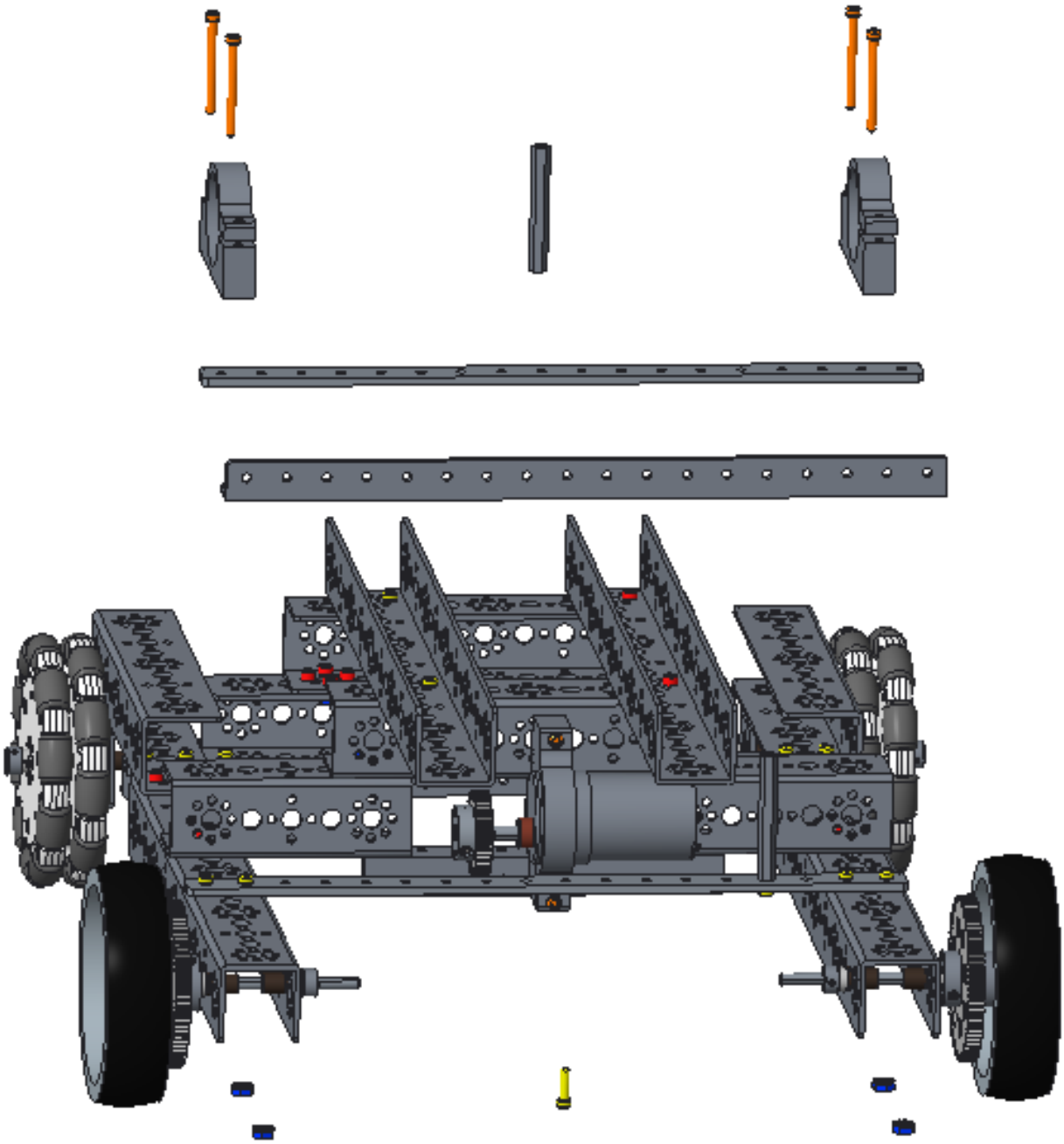

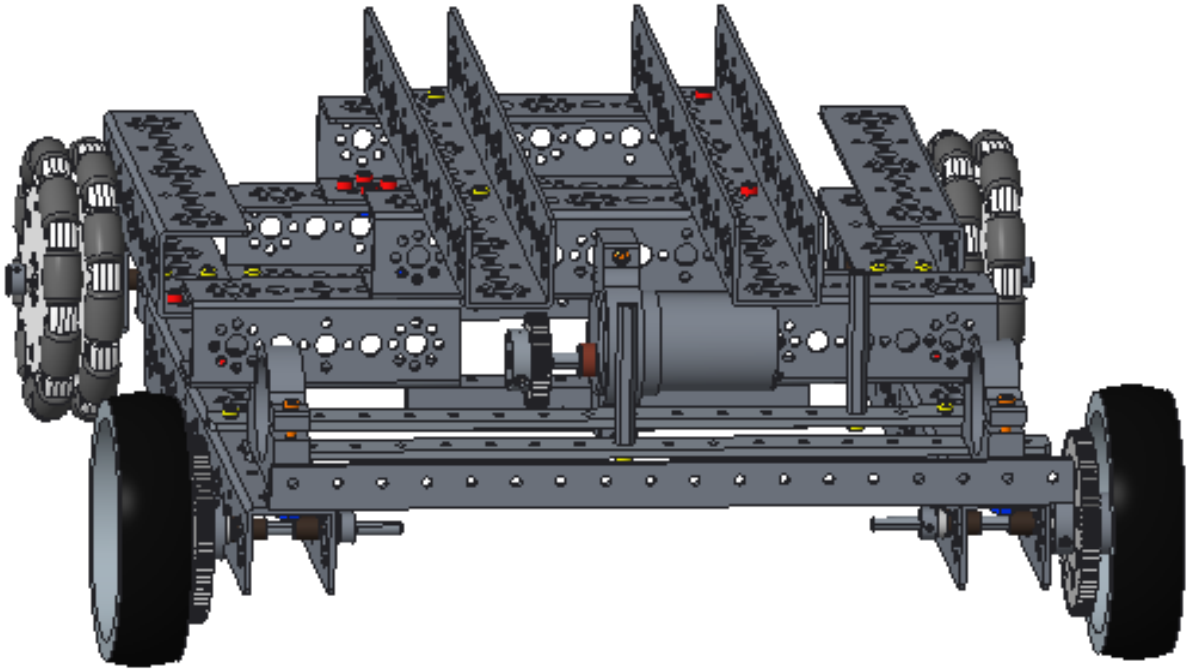

The above image shows the front of the robot.

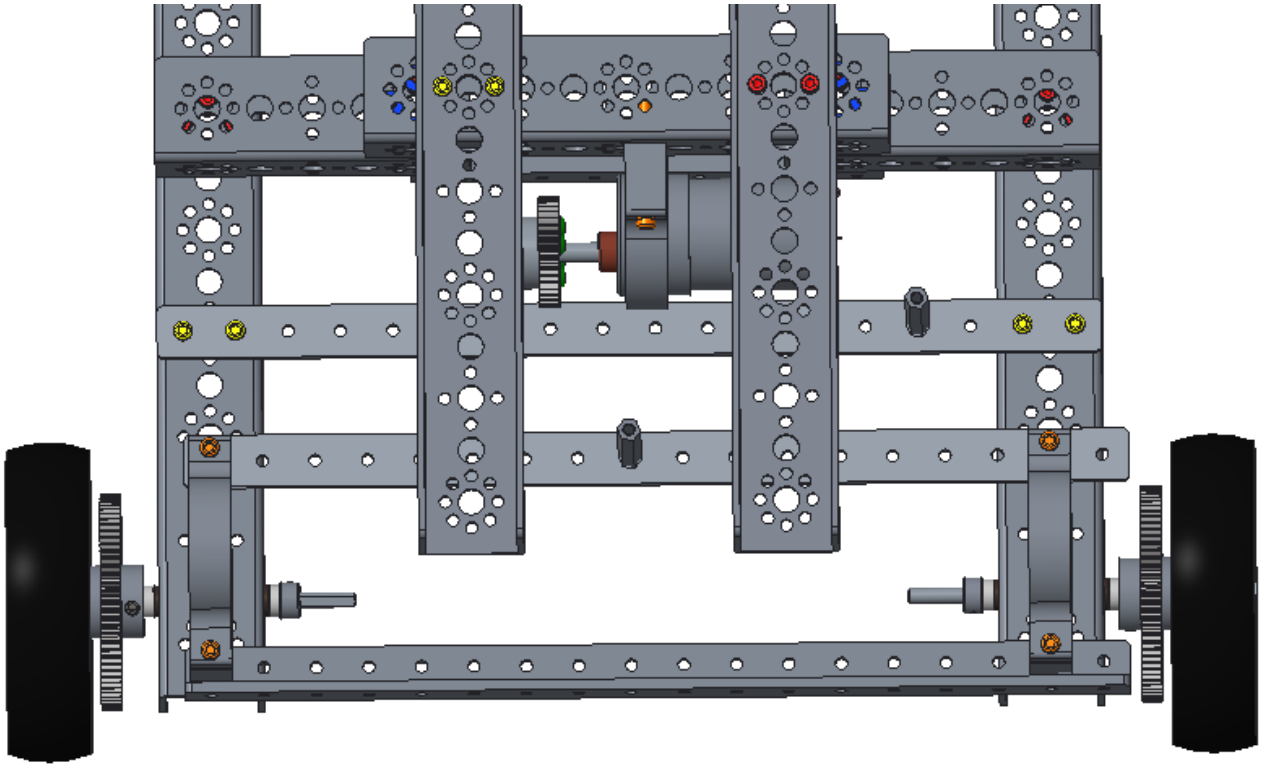

The above image shows the top of the robot.

Step 2: Motor Encoder Assemblies
Make two.

DC motor (1), encoder (1)

Refer to the instructions from the encoder package to install the encoder onto the motor. Encoder styles vary, so the one in the kit of parts may not look like the one in this document.

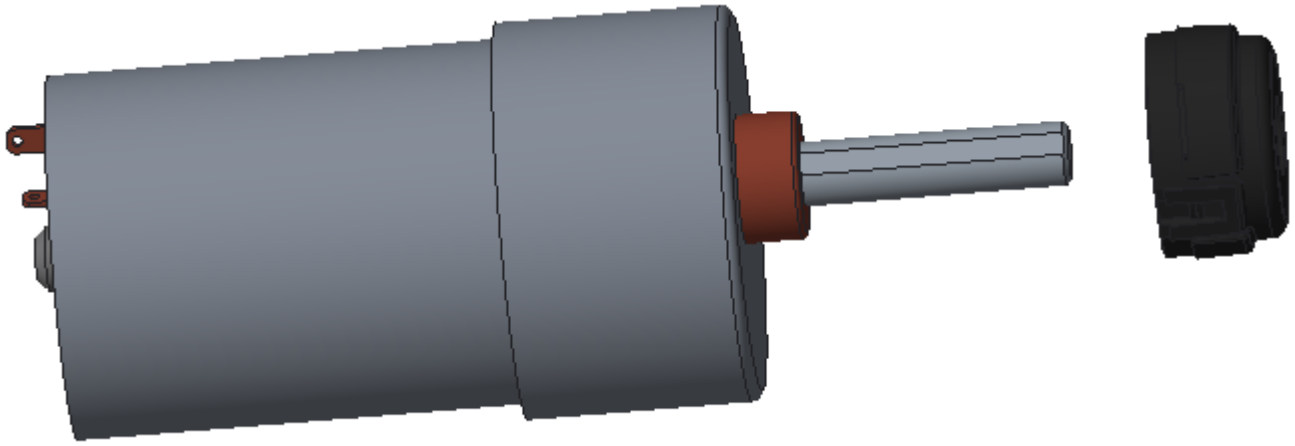

These images show only one motor. Make two.

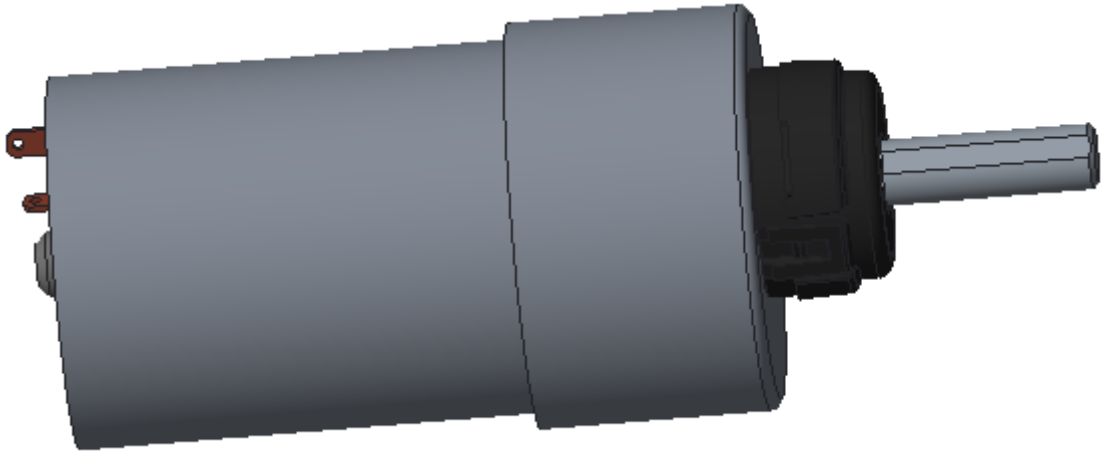

Step 3: Motor and Gear Assemblies
Make two.

assemblies from the previous step (2), motor shaft hubs (2) with included set screws (2), 40-tooth gears (2), 3/8” button head cap screws (8)

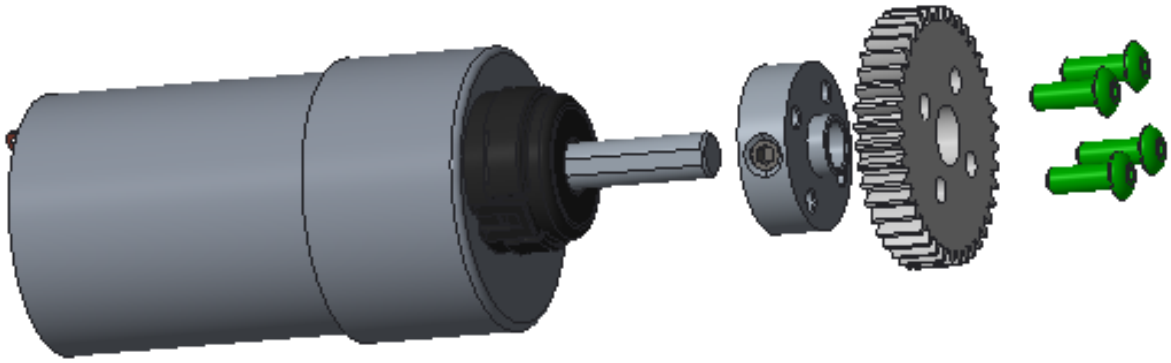

These images show only one motor. Make two.

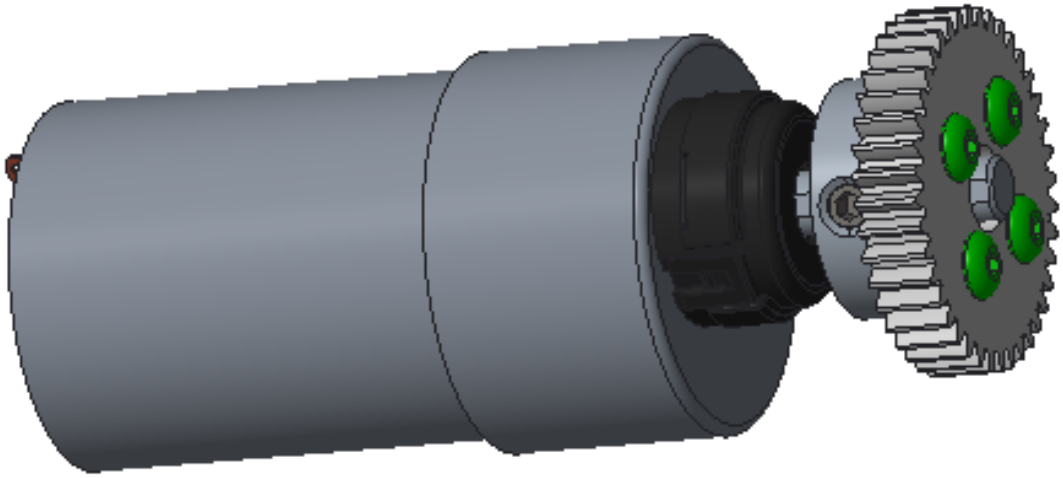

Step 4: Mounting the Motors

chassis, assemblies from the previous step (2)

Insert the motors into the motor mounts, aligning the small gears on the motors with the medium gears on the wheels.

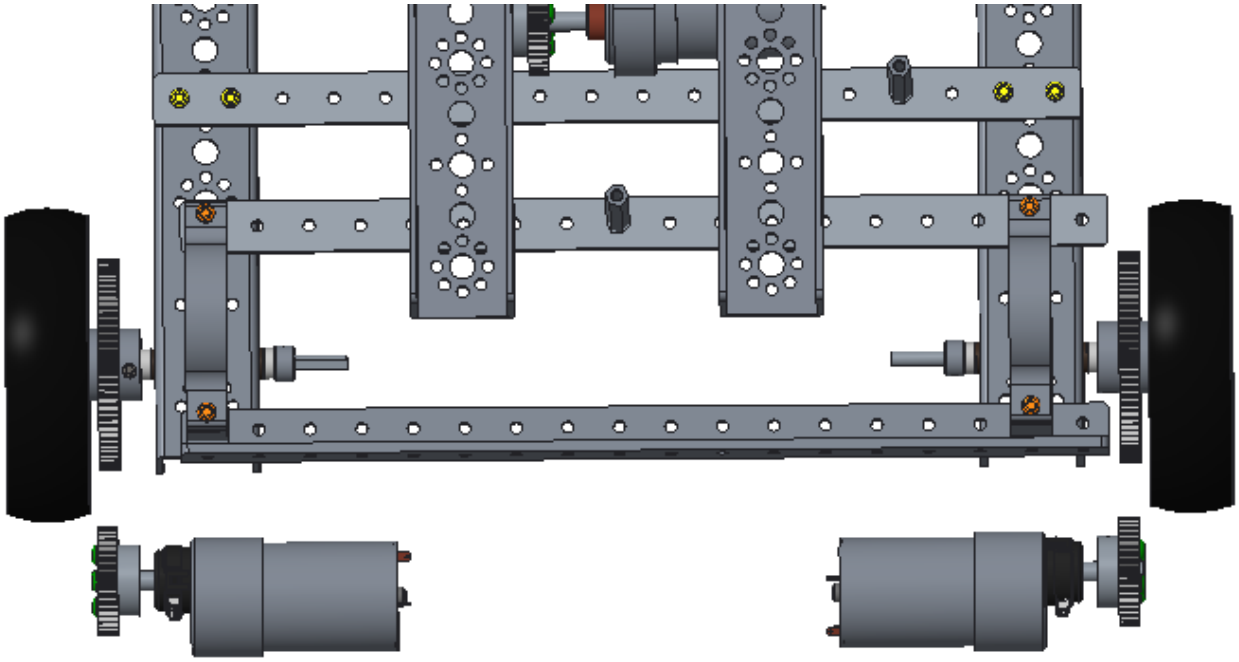

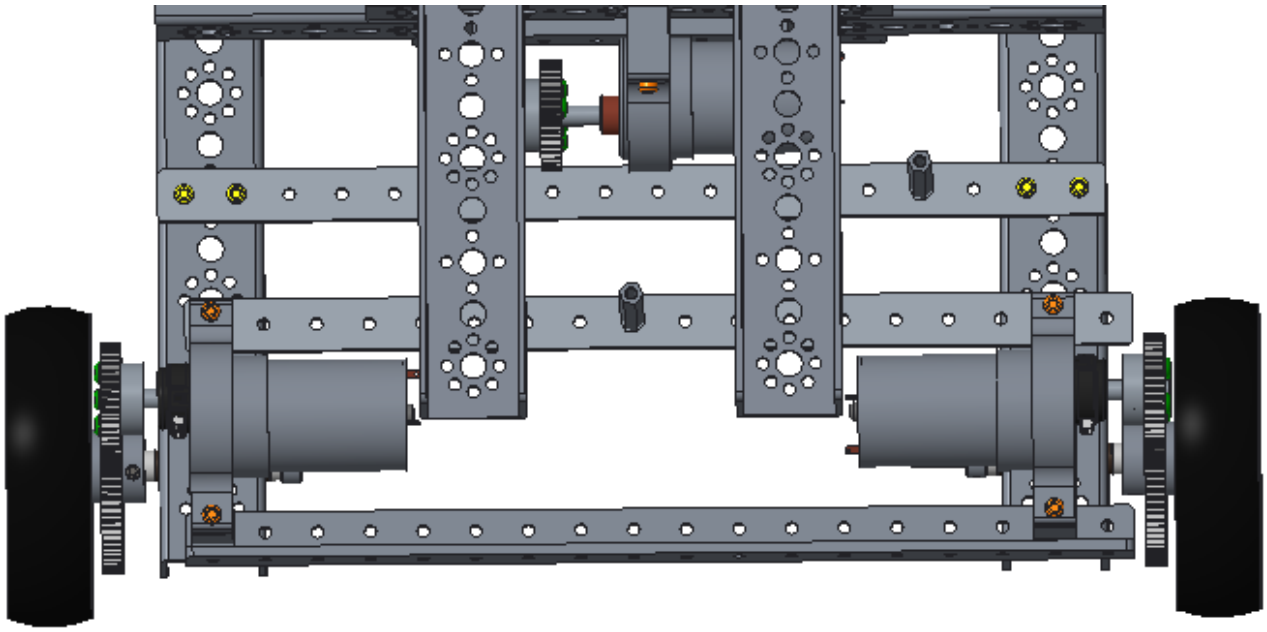

Adding the Expansion Hub Assembly

Step 1: Vertical Support

64 mm x 192 mm flat building plate (1), inside corner brackets (2), 5/16" socket head cap screws (4), keps nuts (4)

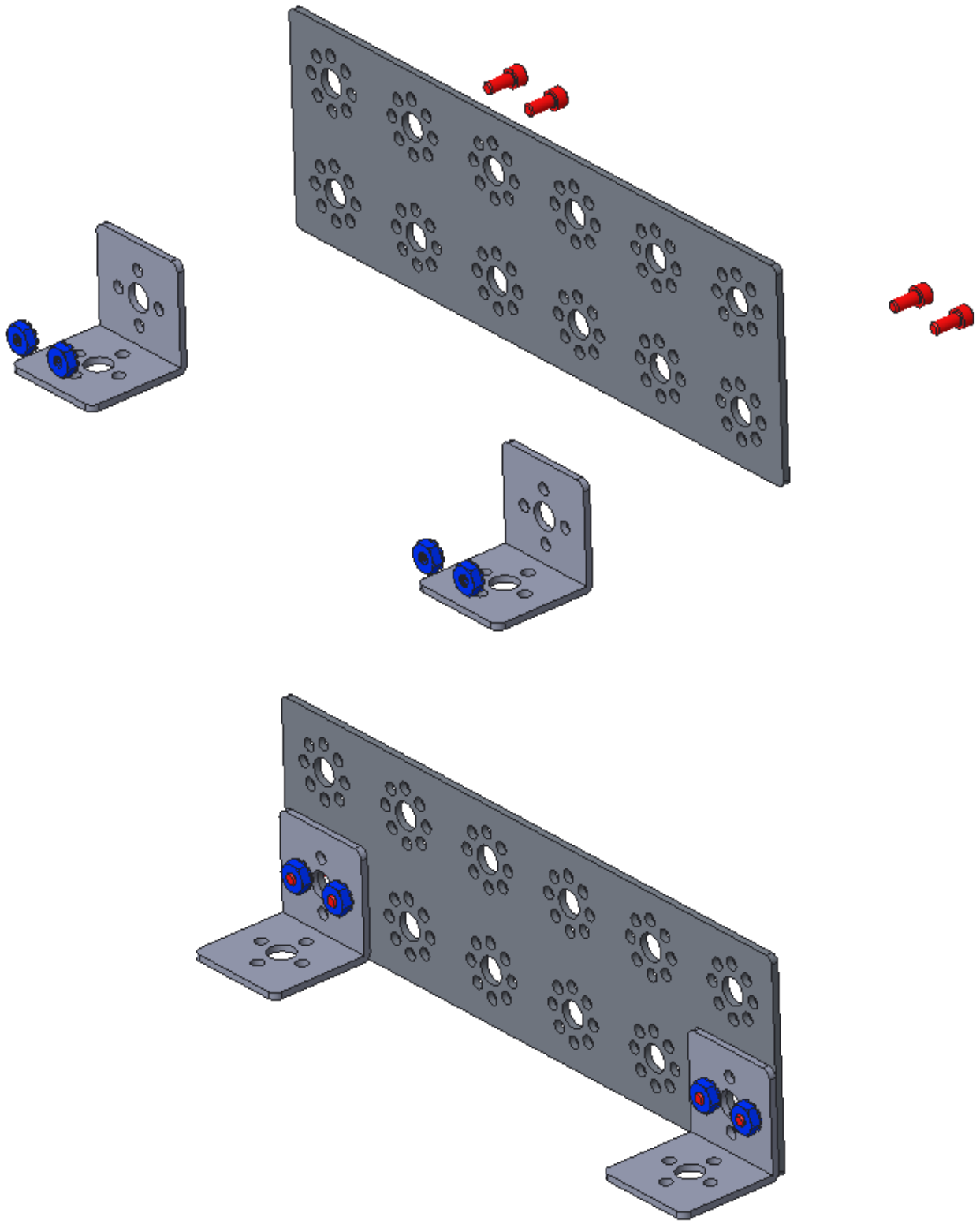

Step 2: Horizontal Support

assemblies from the previous step, 64 mm x 192 mm flat building plate (1), 3/8” button head cap screws (4), keps nuts (4)

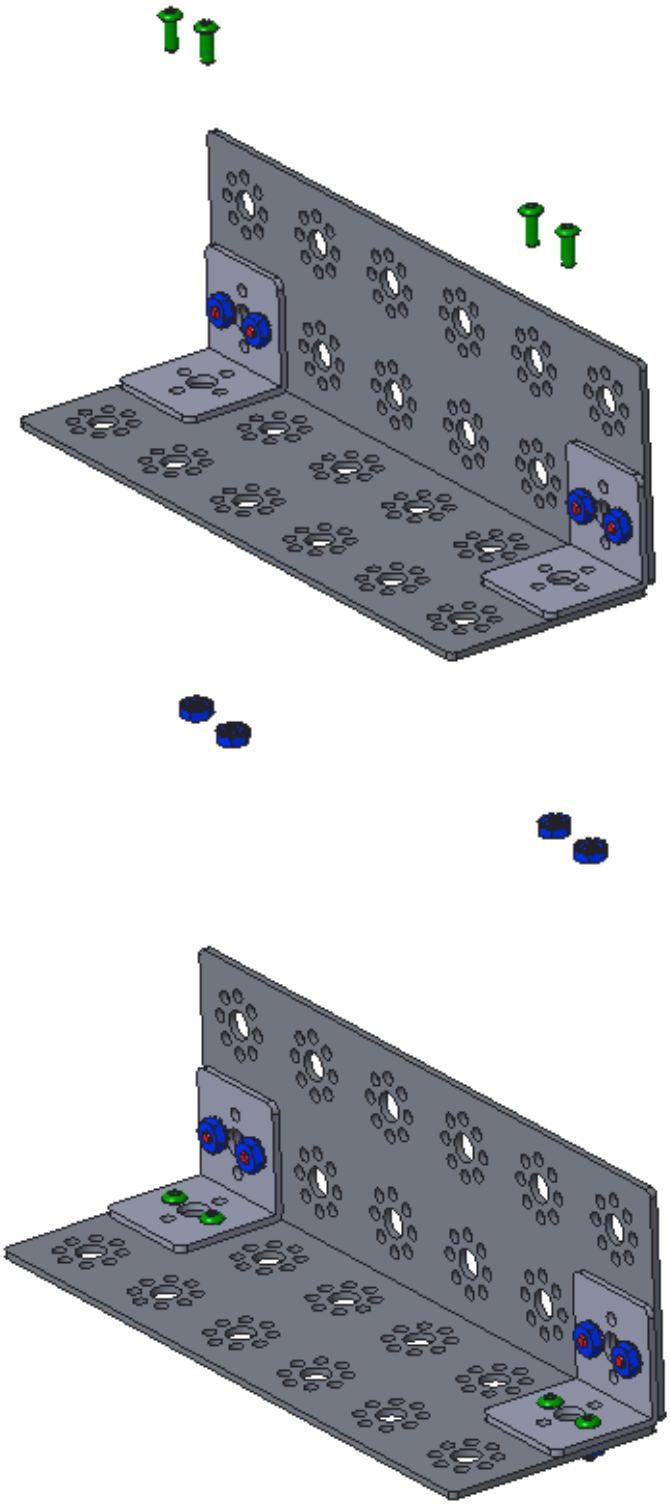

Step 3: Expansion Hub Support

assembly from the previous step (1), 160 mm flat (1), 3/8” button head cap screws (3), keps nuts (3)

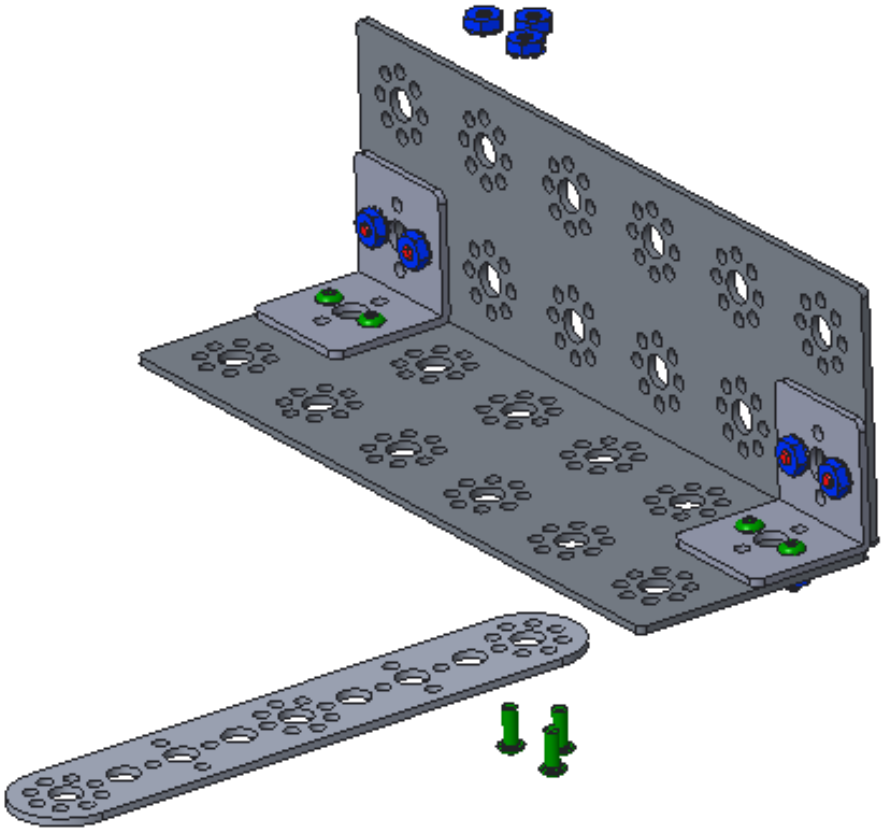

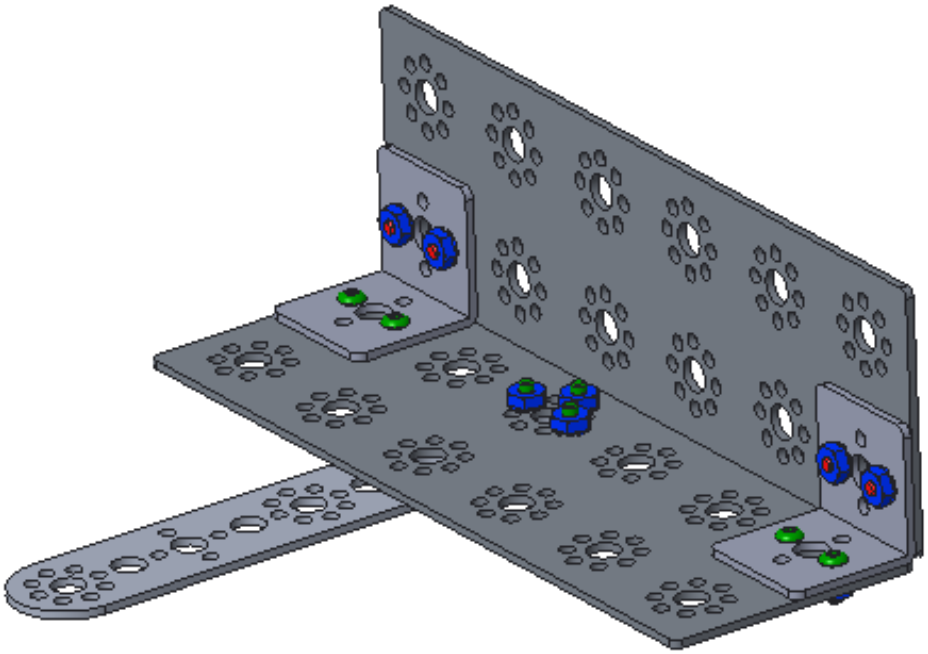

Step 4: Adding the Rev Robotics Expansion Hub

assembly from the previous step (1), expansion hub (1) with included bolts (2) and nuts (2)

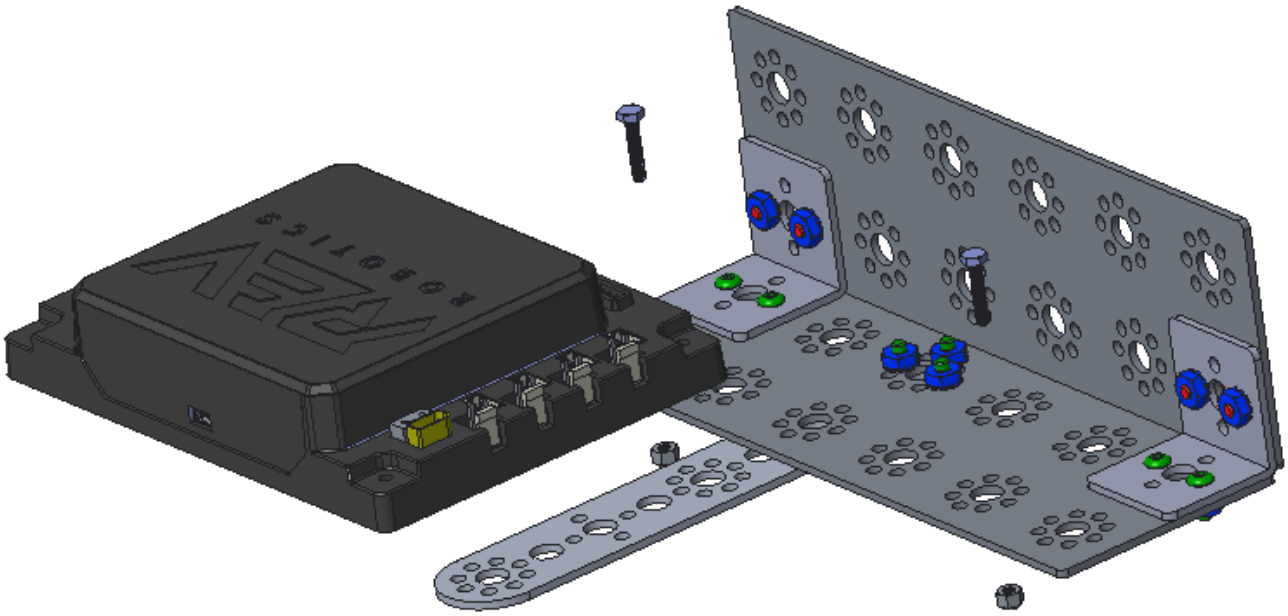

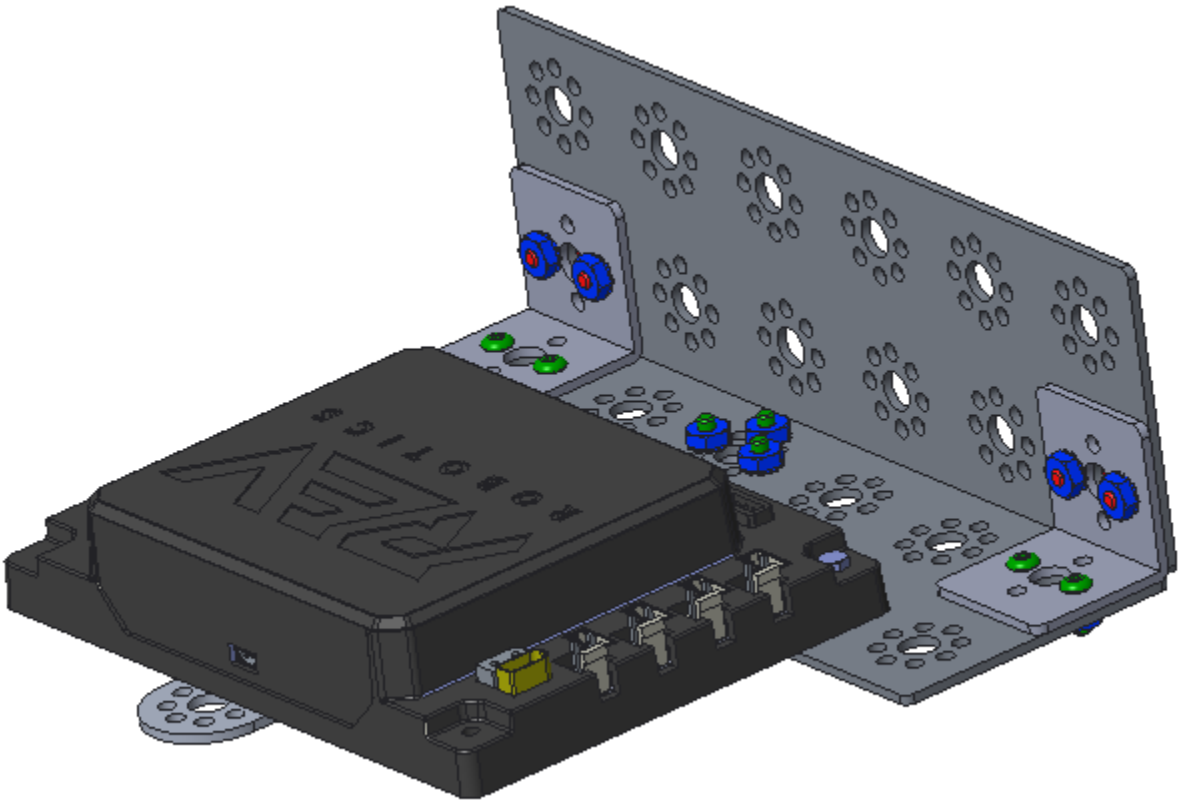

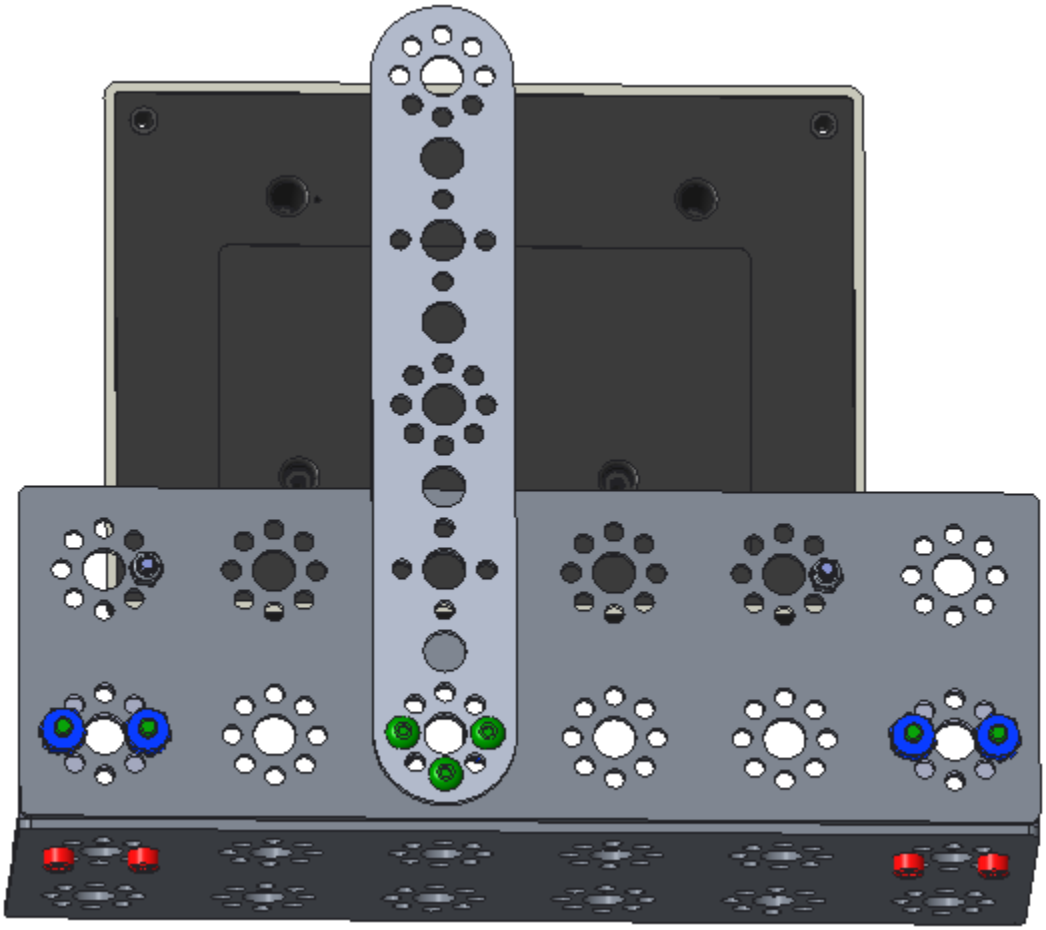

The above image shows the bottom of the assembly.

Step 5: Attach Assembly to Chassis

chassis, assembly from the previous step (1), 1/2" socket head cap screws (4), keps nuts (4)

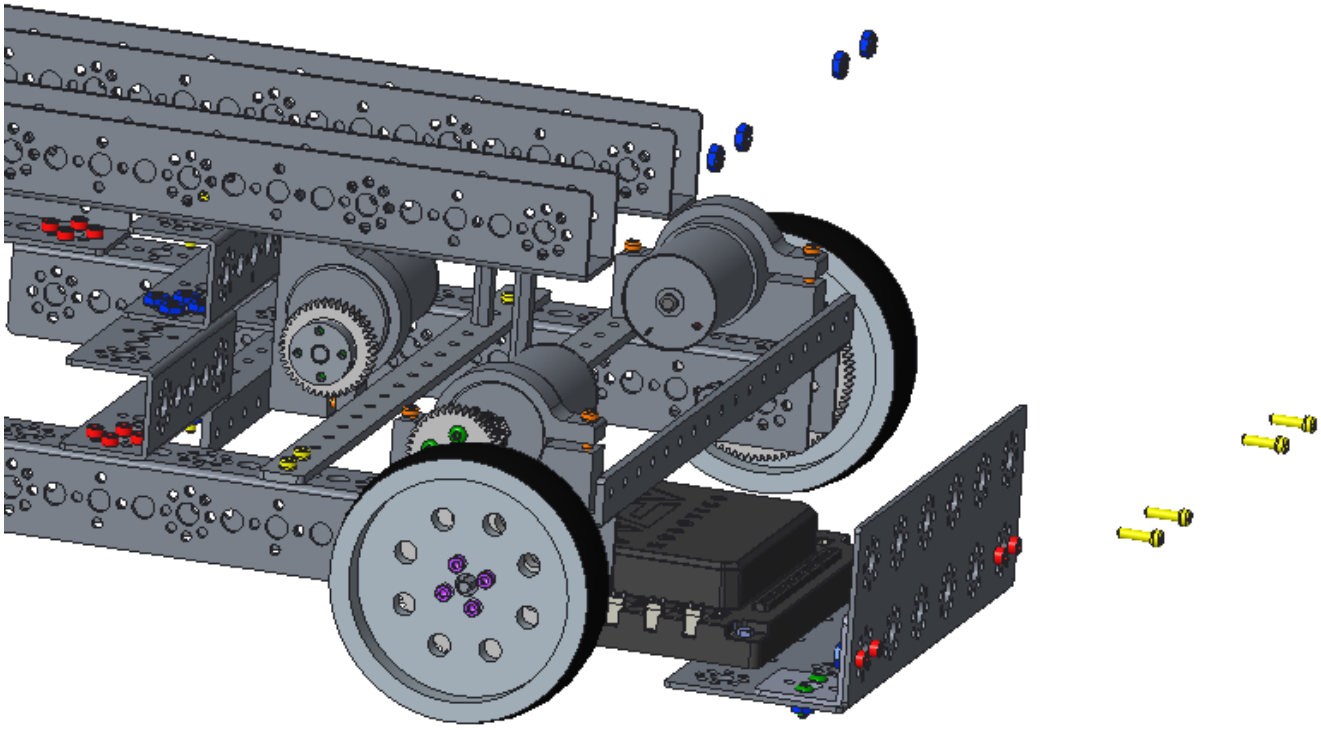

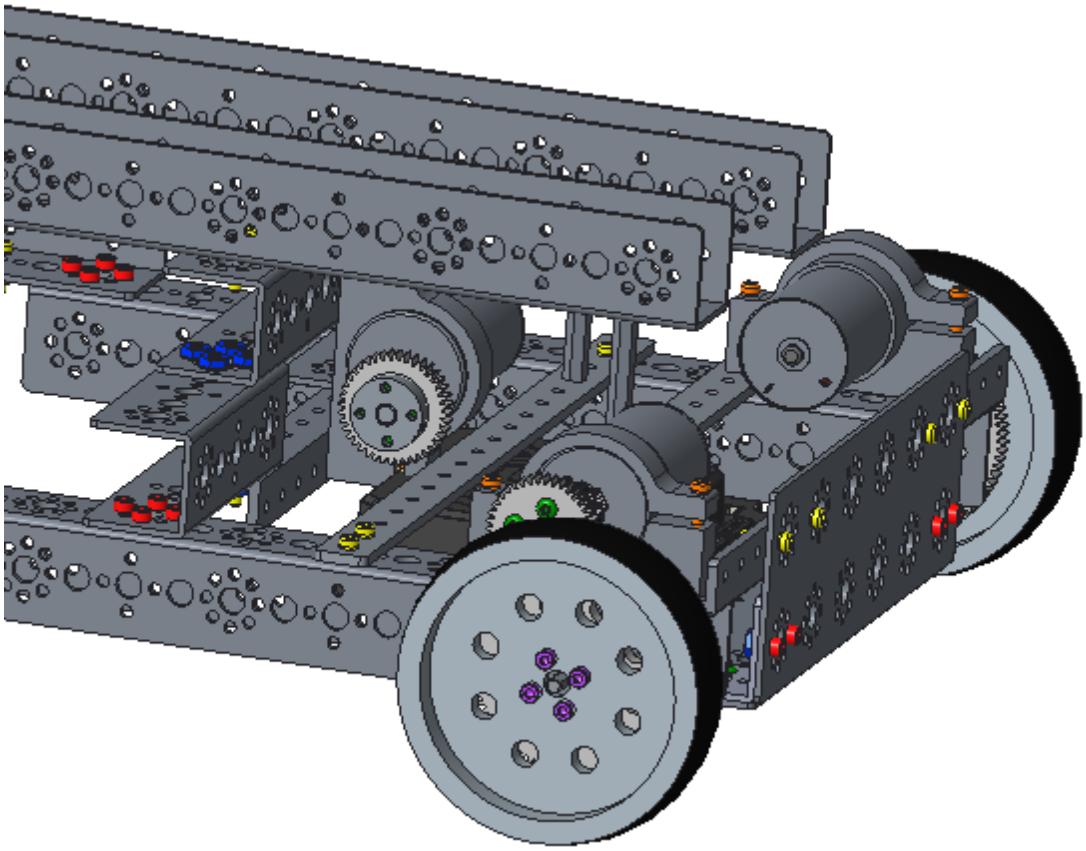

Notice on this rear view of the robot that the bolts are one up and to the left of the hole pattern. This brings the lower plate higher on the robot to allow for a higher drive clearance.

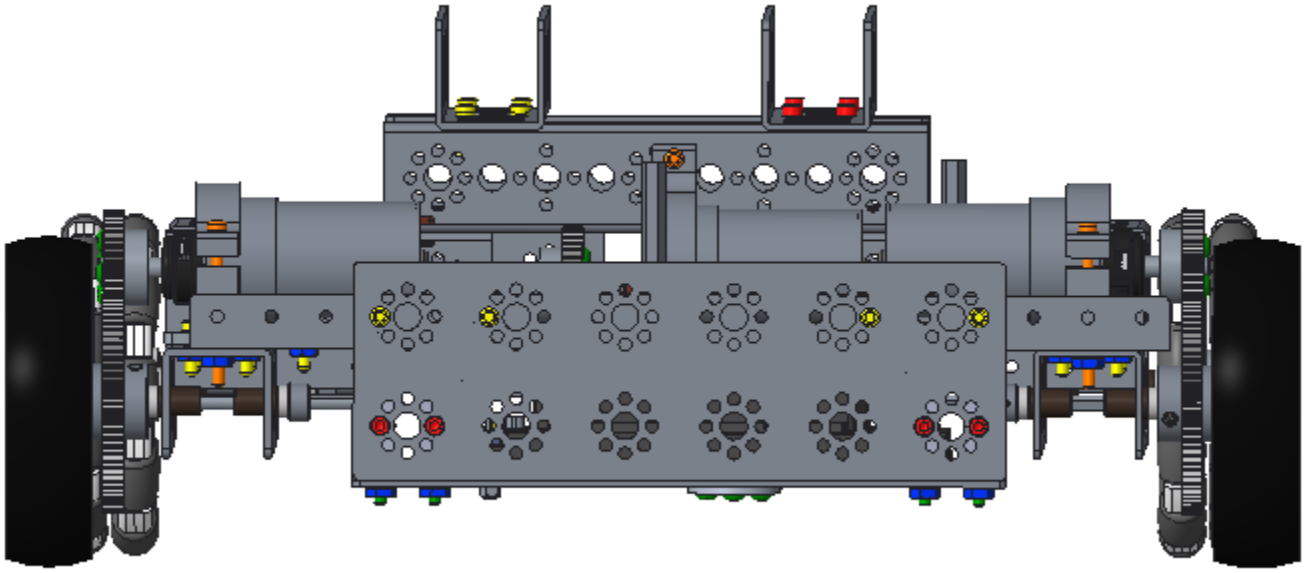

Adding the Arm

Step 1: Arm Gear Box

120-tooth gear (1), 40-tooth gear (1), axle hub (1) with included set screw (1), 1/2" socket head cap screws (4)

Note that the bolts are inserted from opposite sides. The two bolts on each side are in opposite holes. The bolts on one side will be 90 degrees rotated from the bolts on the other side.

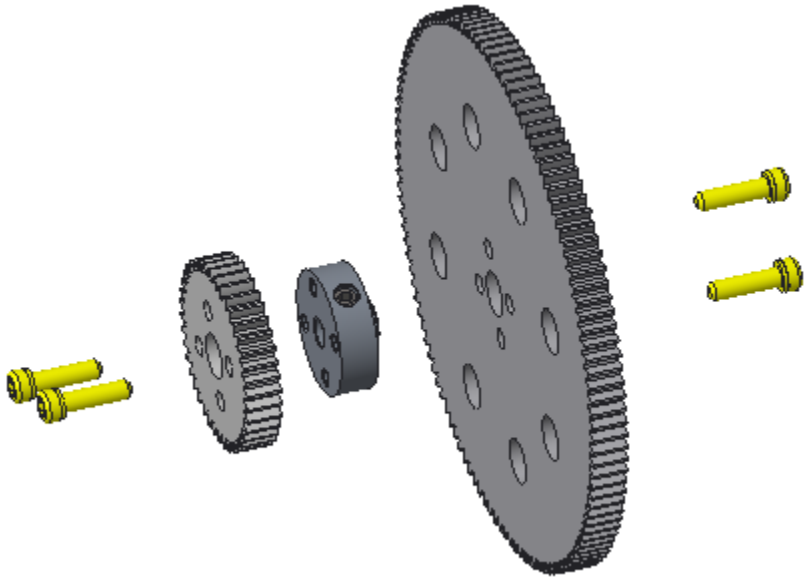

The image below shows the two sides of the same gear assembly.

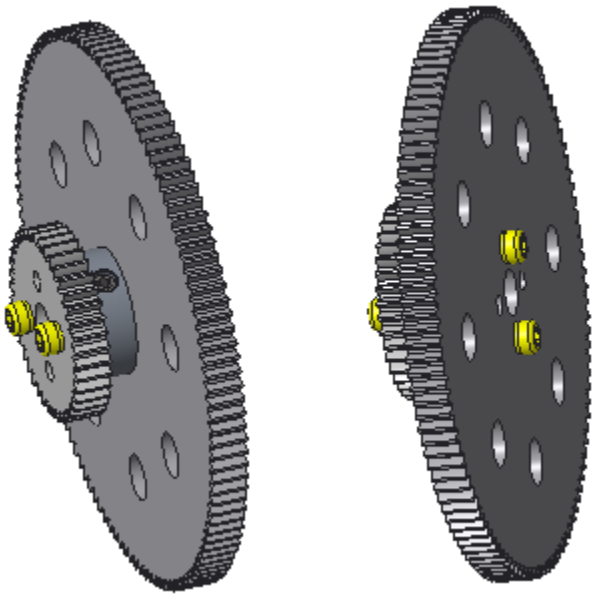

Step 2: Adding the Arm Gear Box to the Chassis

chassis, assembly from the previous step, 1/8" axle spacers (2), 11 mm bronze bushings (2), axle set collar (1) with included set screw (1), 100 mm axle (1)

Note that parts of the robot are hidden to make the picture more clear.

Tighten the axle collar and axle clamp set screws, making sure the set screws face the flat side of the axle.

Note: Do not tighten the motor mount bolt that controls the clamp (i.e. the gap on one side of the mount) until the arm has been added, which happens at the end of this section) - the motor should remain disengaged from the gearing so that the arm gears will be free to spin as the arm is installed.

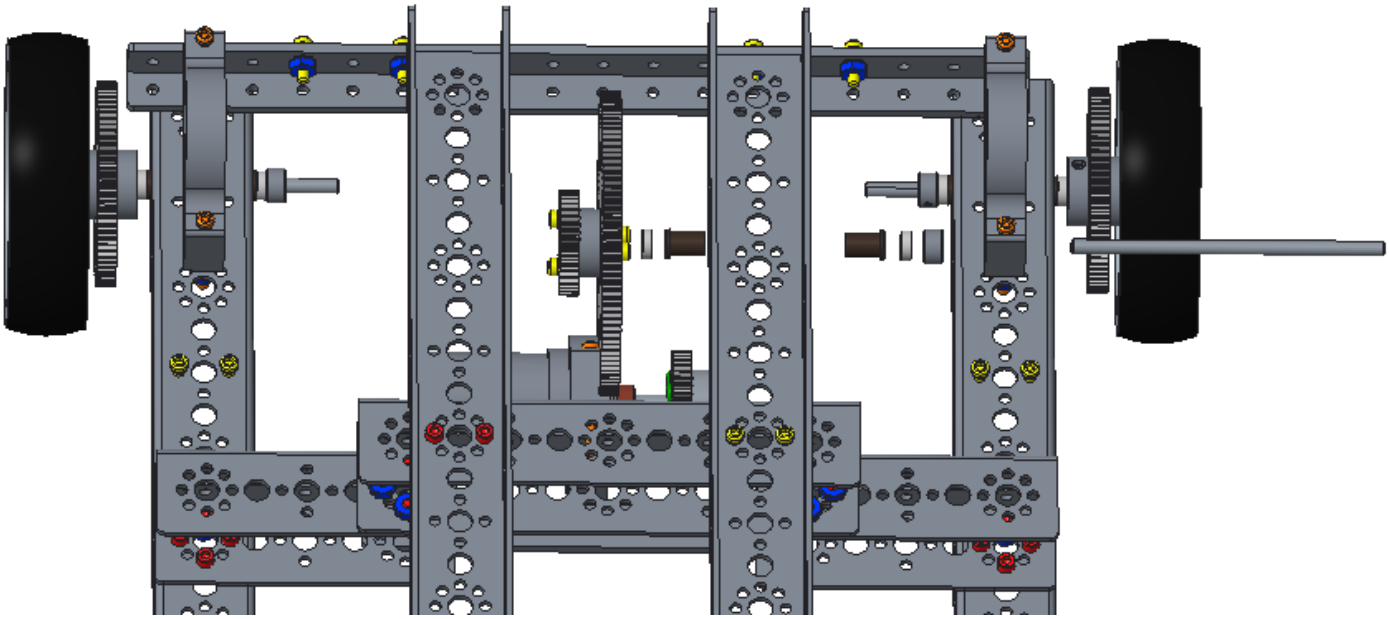

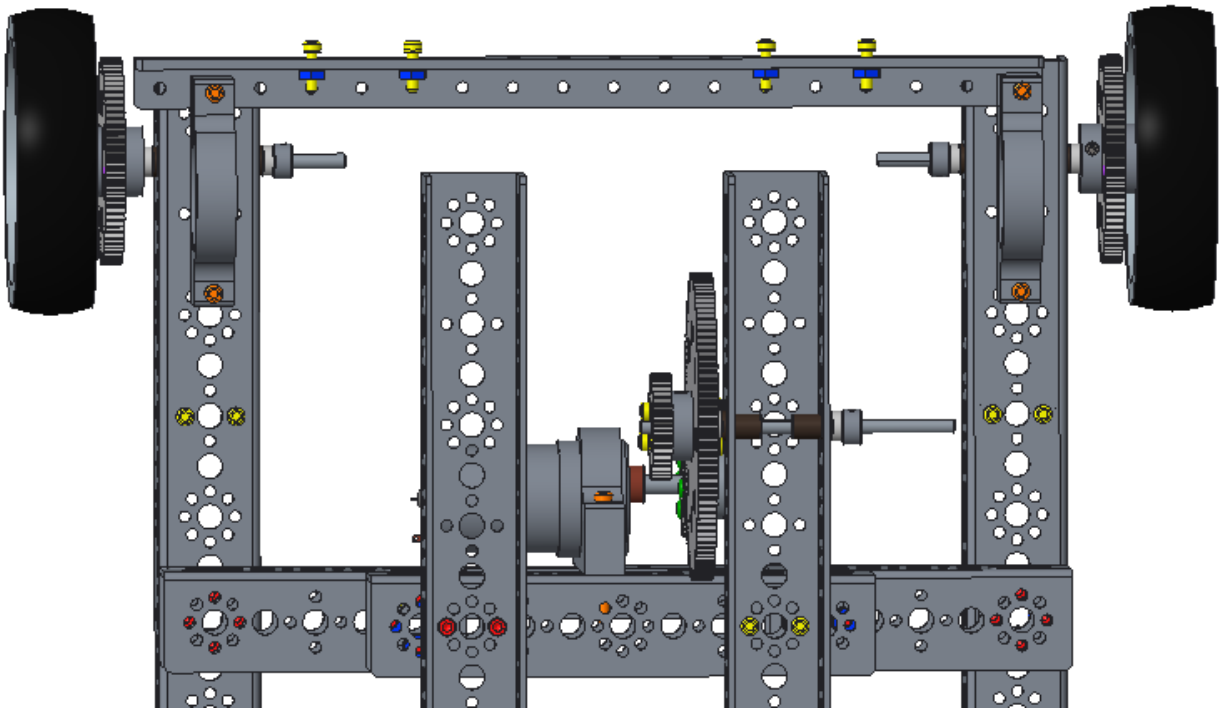

Step 3: Arm Gear

416 mm channel (1), 11 mm bronze bushing (1), 1/2" socket head cap screws (4), axle set collar (1) with included set screw (1)

Notice that the two bolts on one side are in opposite holes from the bolt on the other side.

Also take note of placing the axle clamp so its set screw faces the open end of the channel. This will make it easier to tighten/loosen with the arm in its final position.

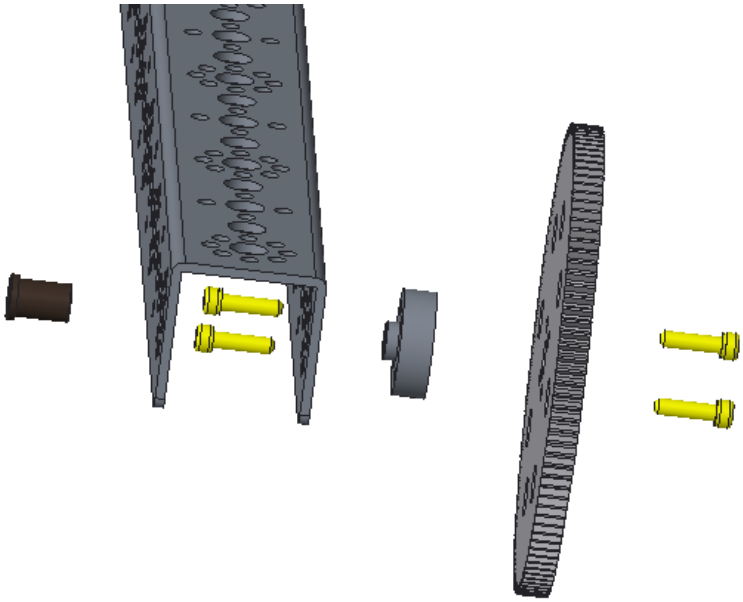

The image below shows the two sides of the same gear assembly.

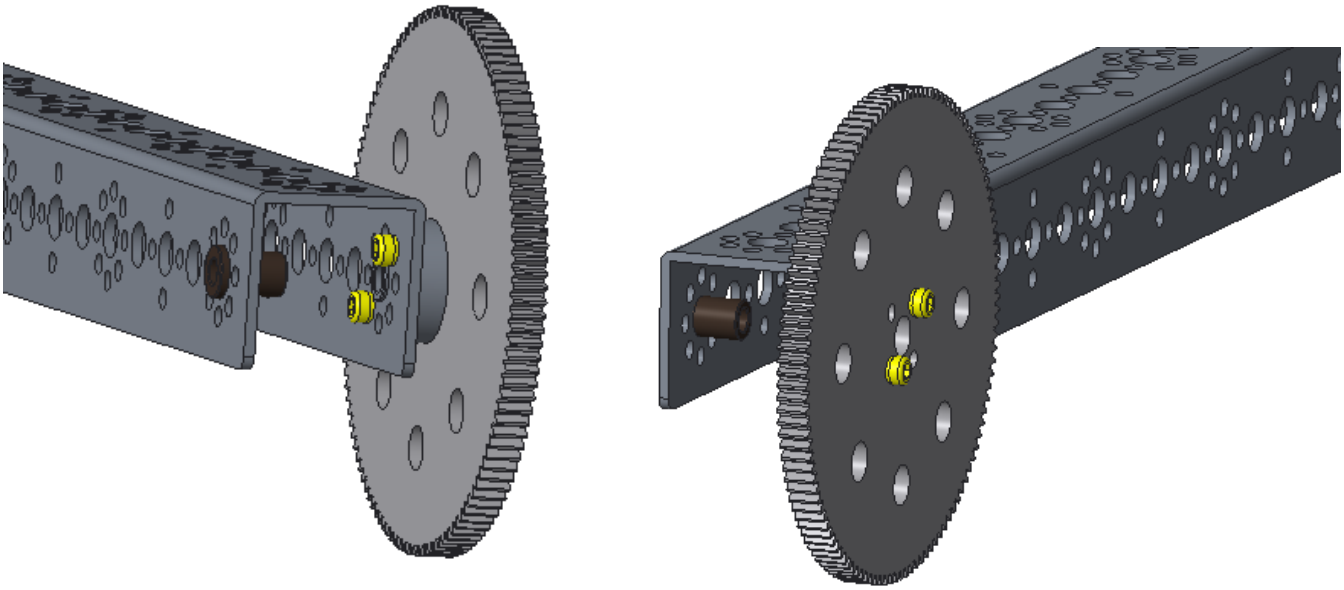

Step 4: Adding the Arm to the Chassis

chassis, arm assembly from the previous step, axle collar (1) with included set screw (1), 11 mm bronze bushings (2), 100 mm axle (1), 1/8" axle spacer (1).

Make sure the set screws of the collar and clamp are facing the flat side of the axle.

The order from left to right in the image below is bushing, channel, spacer, collar, [space], arm, bushing, bushing, channel. Align the large arm gear with the small gear on the chassis.

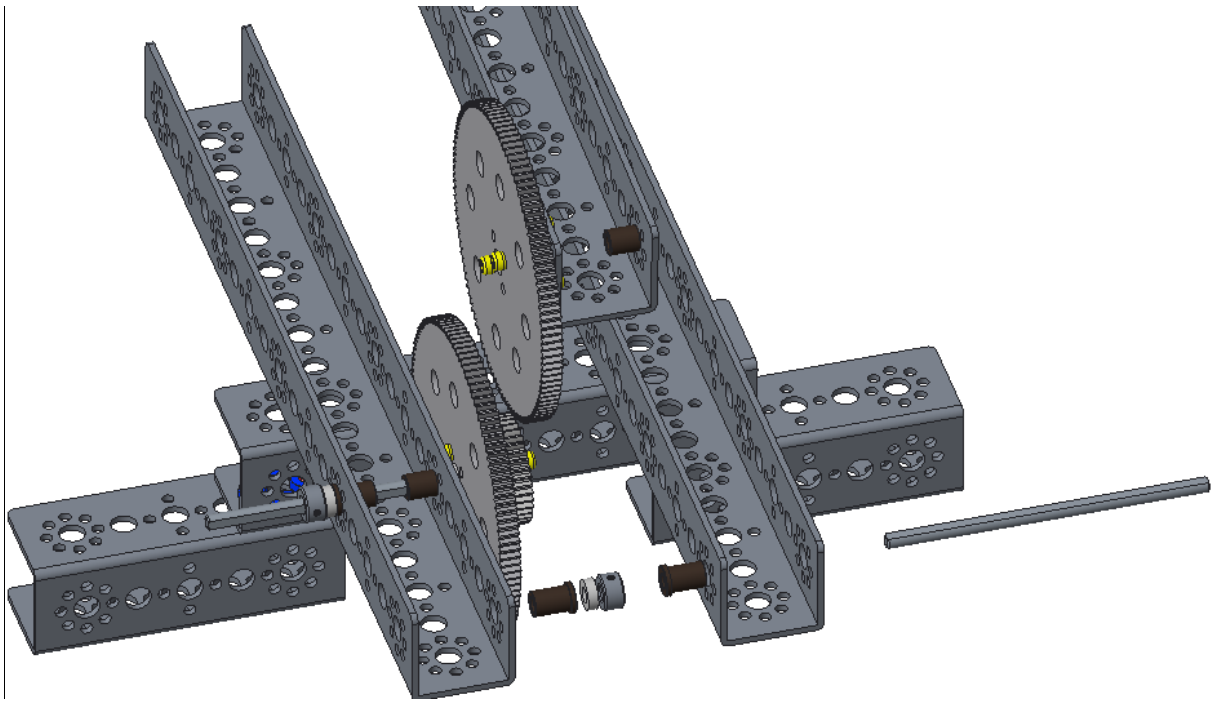

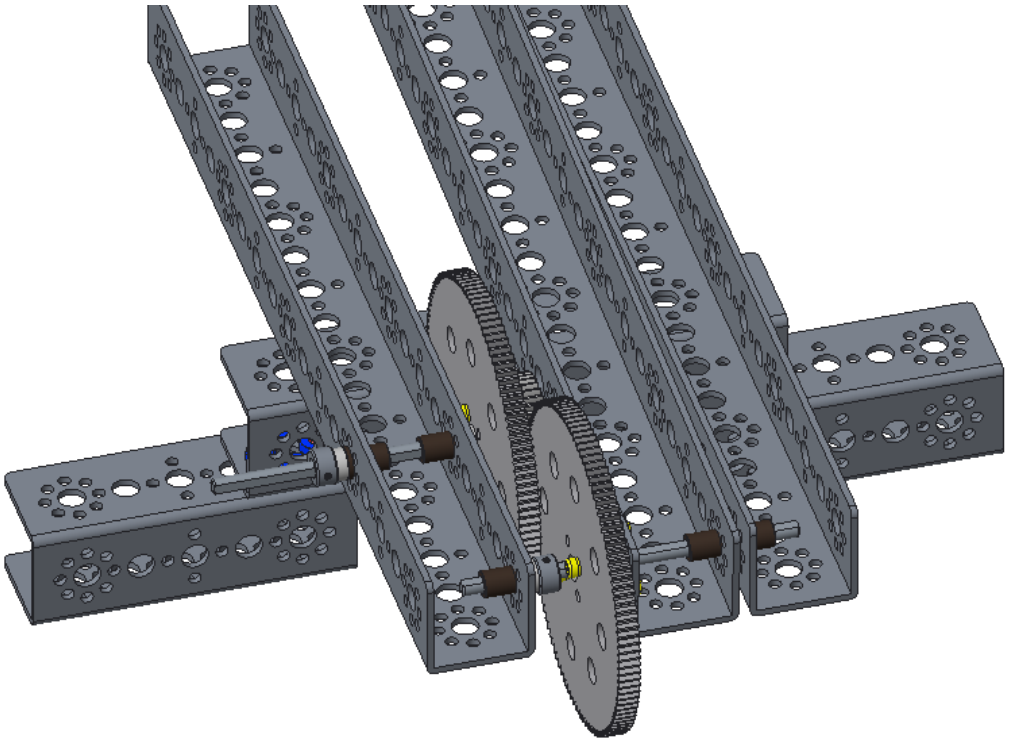

The image below is of the front of the robot and from slightly below.

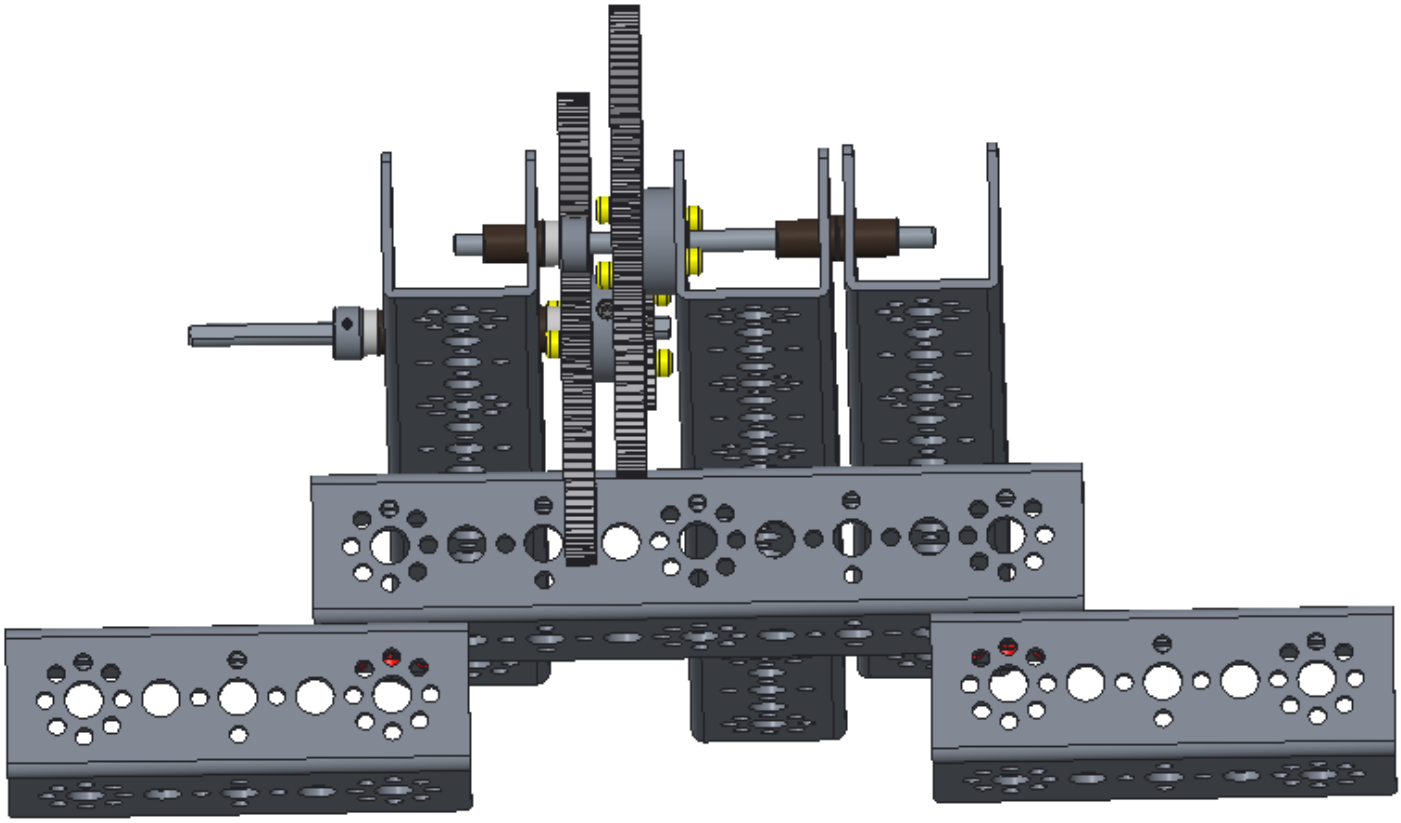

Adding the Hands

Step 1: Hand Servo Brackets

chassis, single standard-scale servo motor mounting brackets (2), 3/8" button head cap screws (8), keps nuts (8)

The arm motor is not yet engaged with the gear system, so rotate the arm so it is in the orientation shown below.

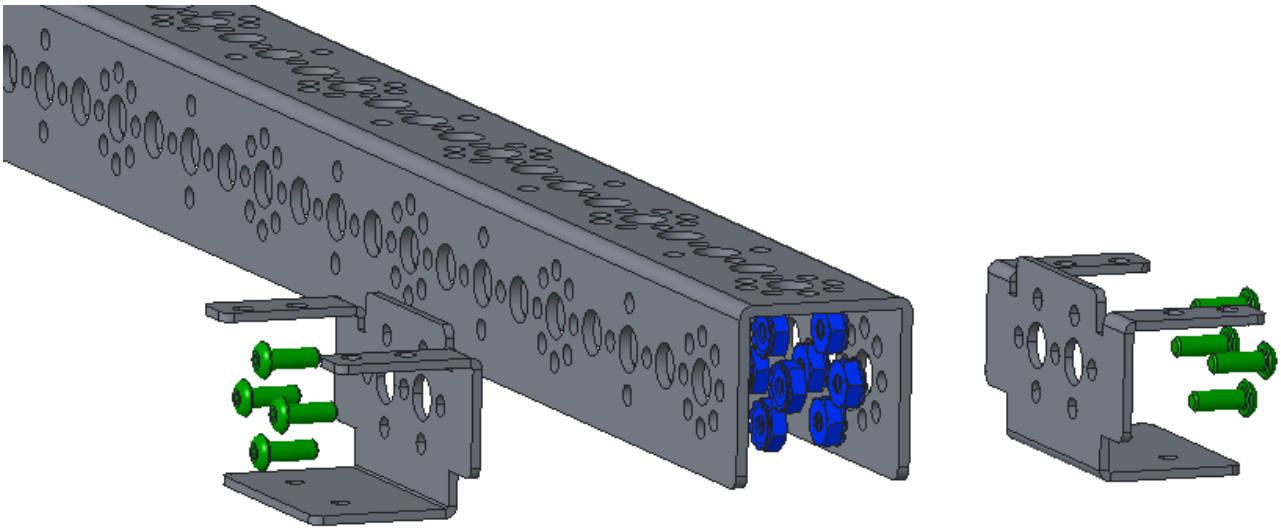

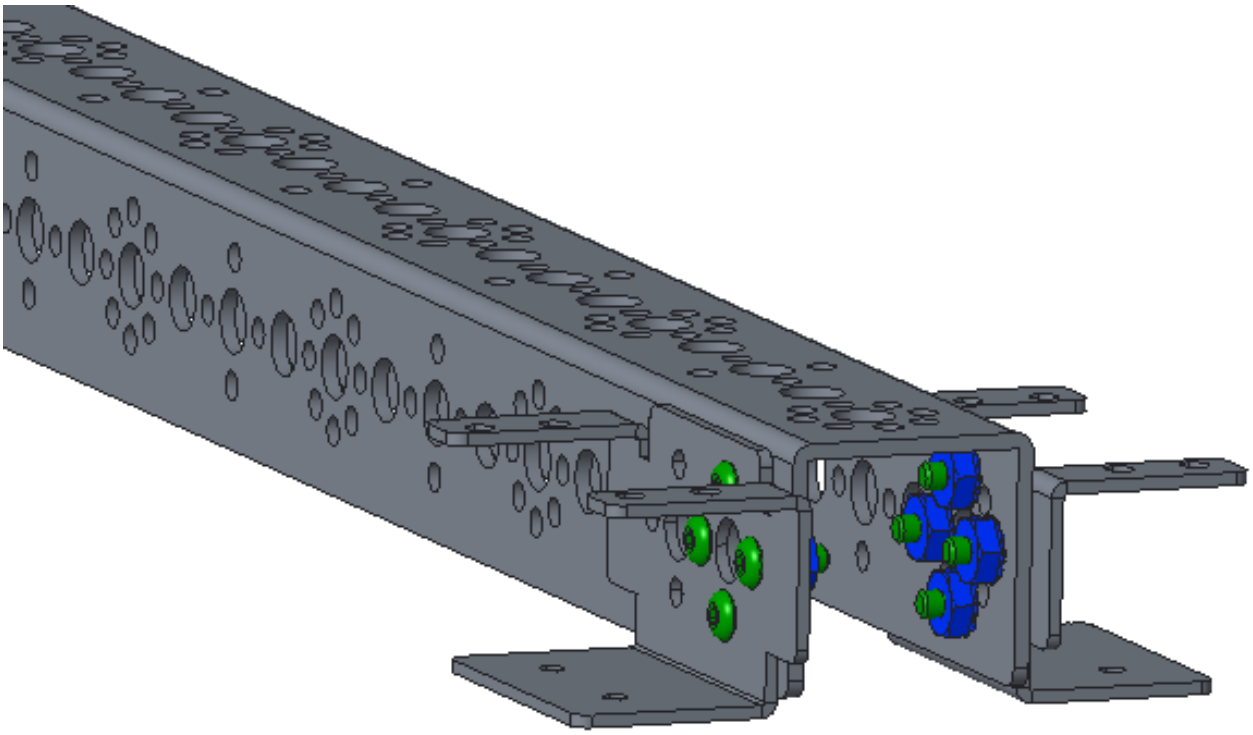

Step 2: Hand Part 1

flat brackets (2), quarter-scale servo horns (2), 3/8” button head cap screws (4), keps nuts (8)

This step shows the making of both hands. Do not duplicate this step.

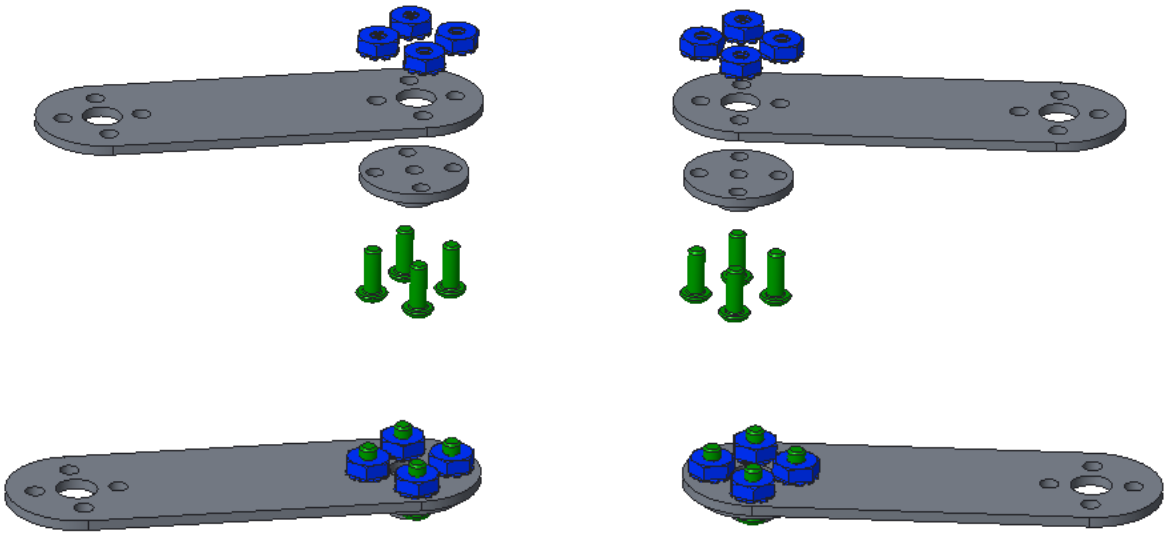

Step 3: Hand Part 2

assembly from the previous step (2), 96 mm flat (2), 5/16” socket head cap screw (8), keps nuts (8)

This step shows the making of both hands. Do not duplicate this step.

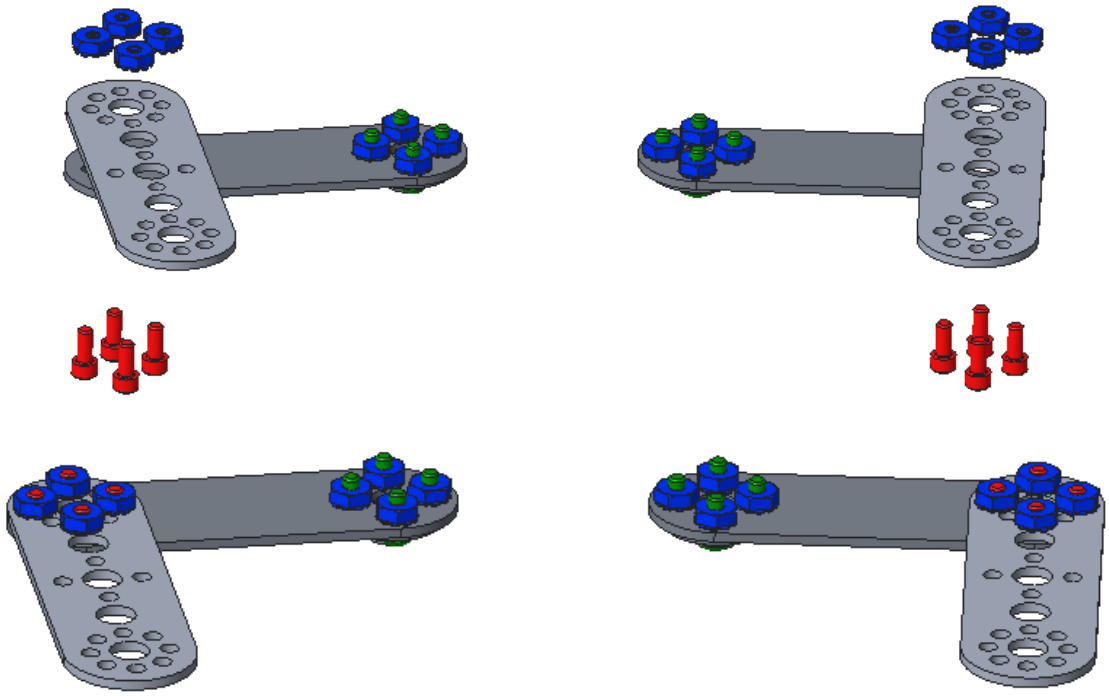

Step 4: Hand Part 3

assemblies from the previous step (2), l-brackets (2), 1/2" socket head cap screws (4), keps nuts (4)

This step shows the making of both hands. Do not duplicate this step.

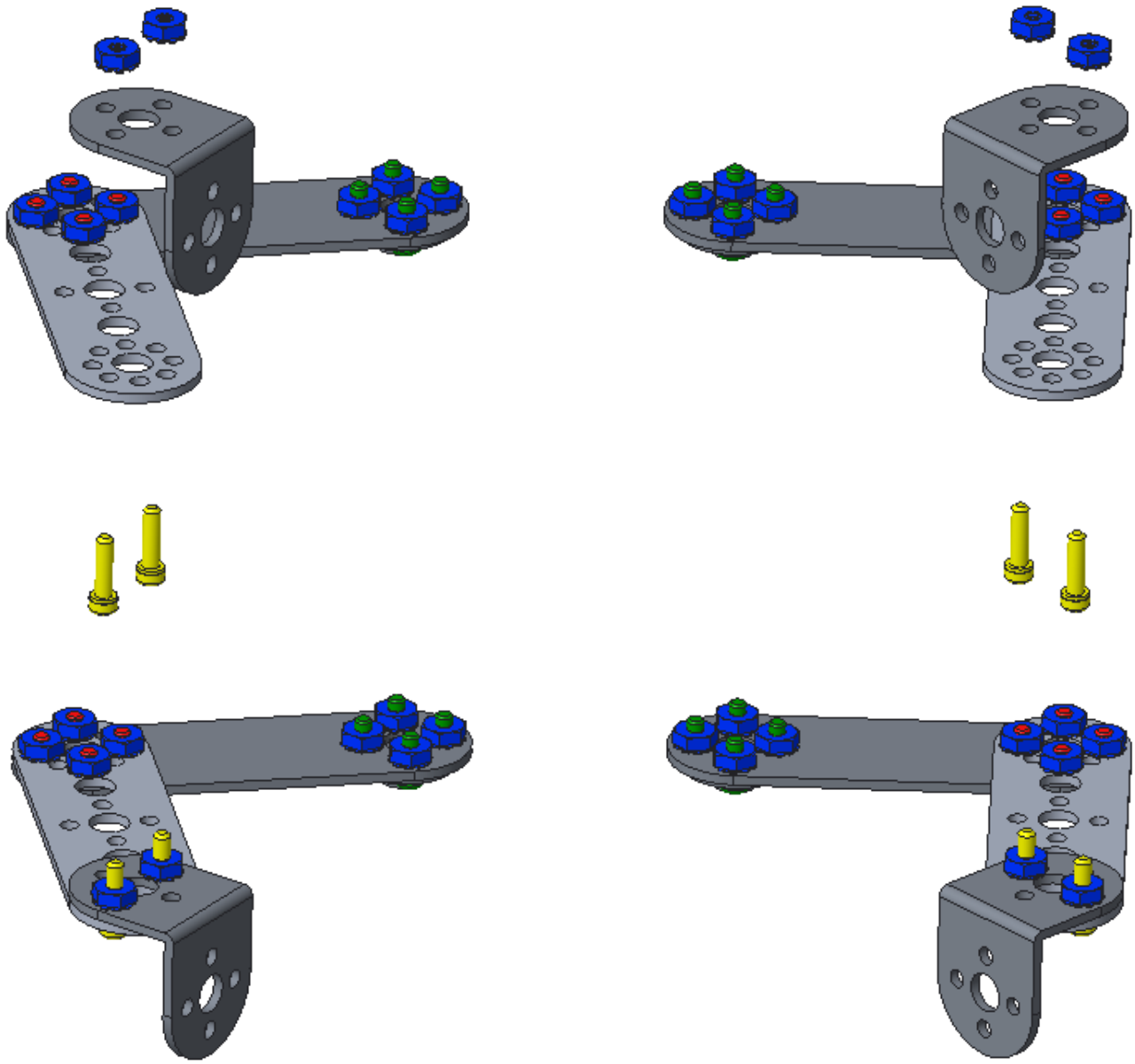

Step 5: Attaching Hands to Servos

assemblies from the previous step (2), standard-scale servo motors (2) with included screws (2)

This step shows the making of both hands. Do not duplicate this step.

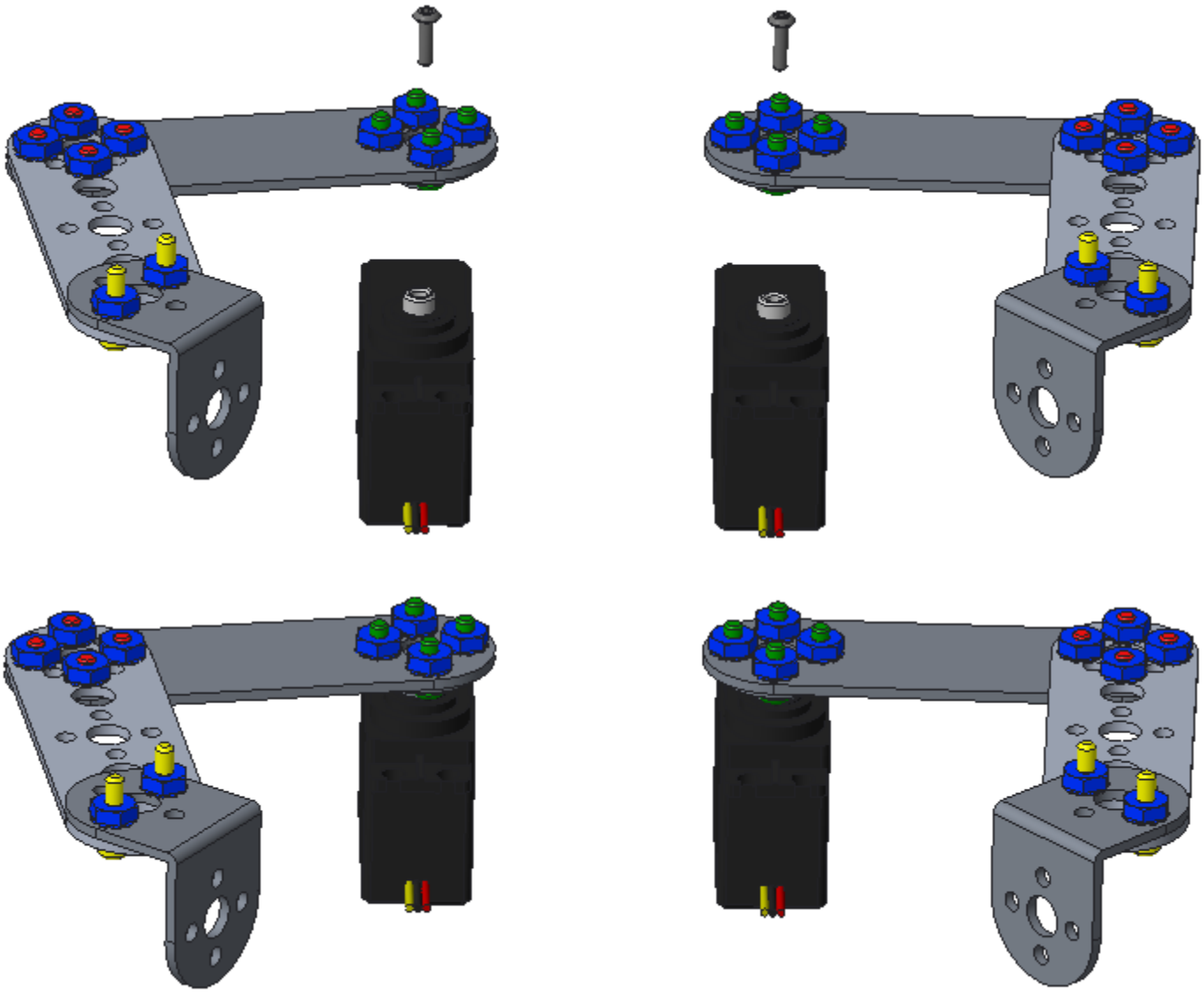

Step 6: Attaching Hands to the Arm

chassis, assemblies from the previous step (2), 1/2" socket head cap screws (8), keps nuts (8)

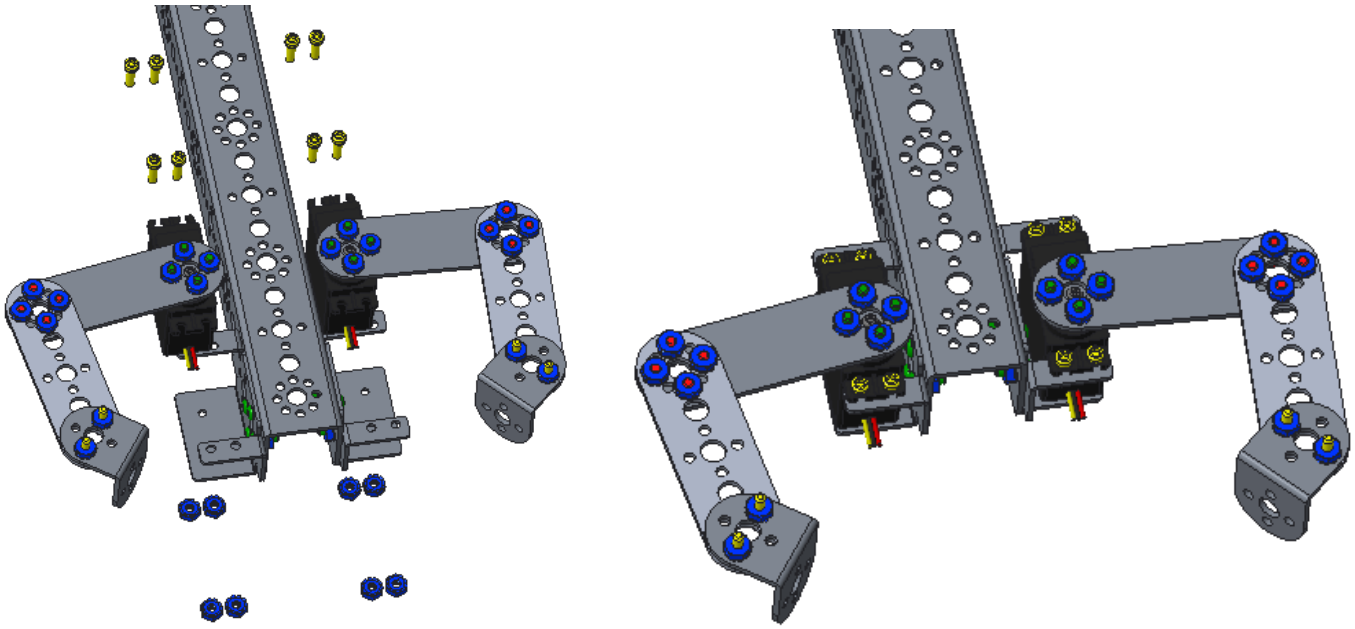

Step 7: Tighten Arm Motor

Rotate the arm to a convenient position, align the arm motor gear with the large gear, and then tighten the arm motor screw, so the motor will no longer rotate.

Adding the Phone and Flag Holders

Step 1: Phone Front Support

chassis, inside corner brackets (2), 5/16” socket head cap screws (4), keps nuts (4)

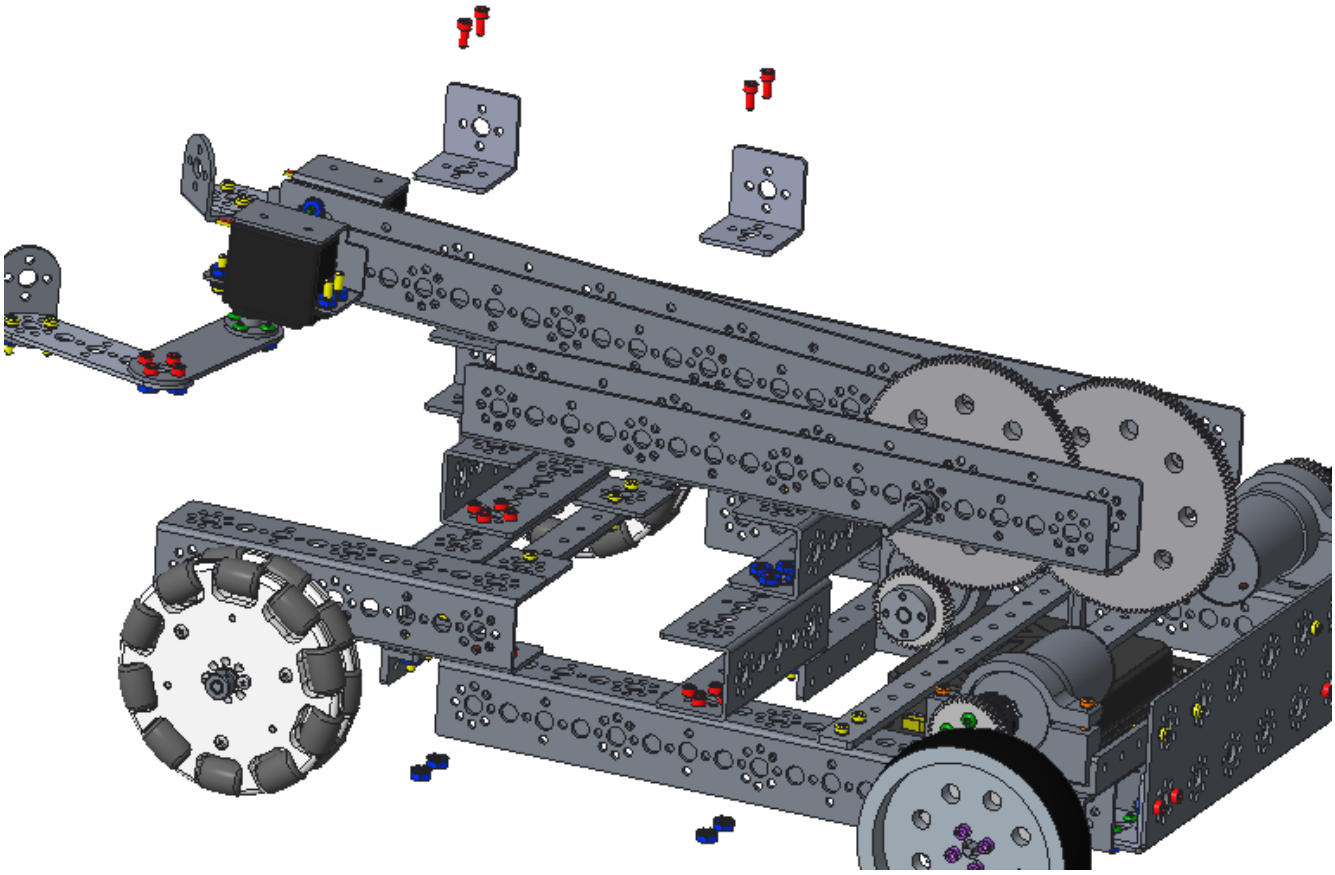

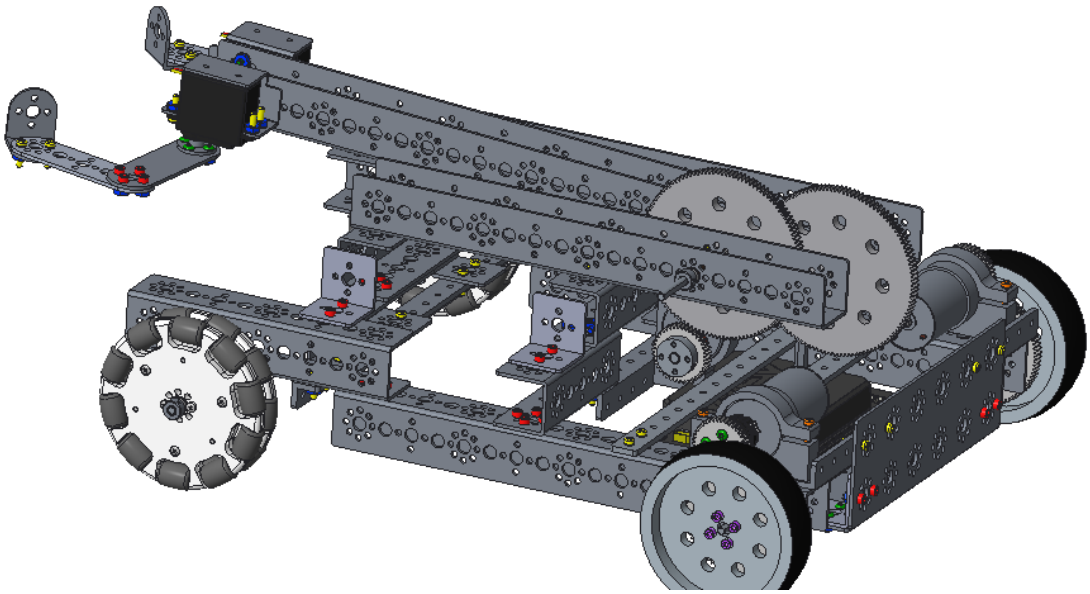

The image below is a top view of the robot.

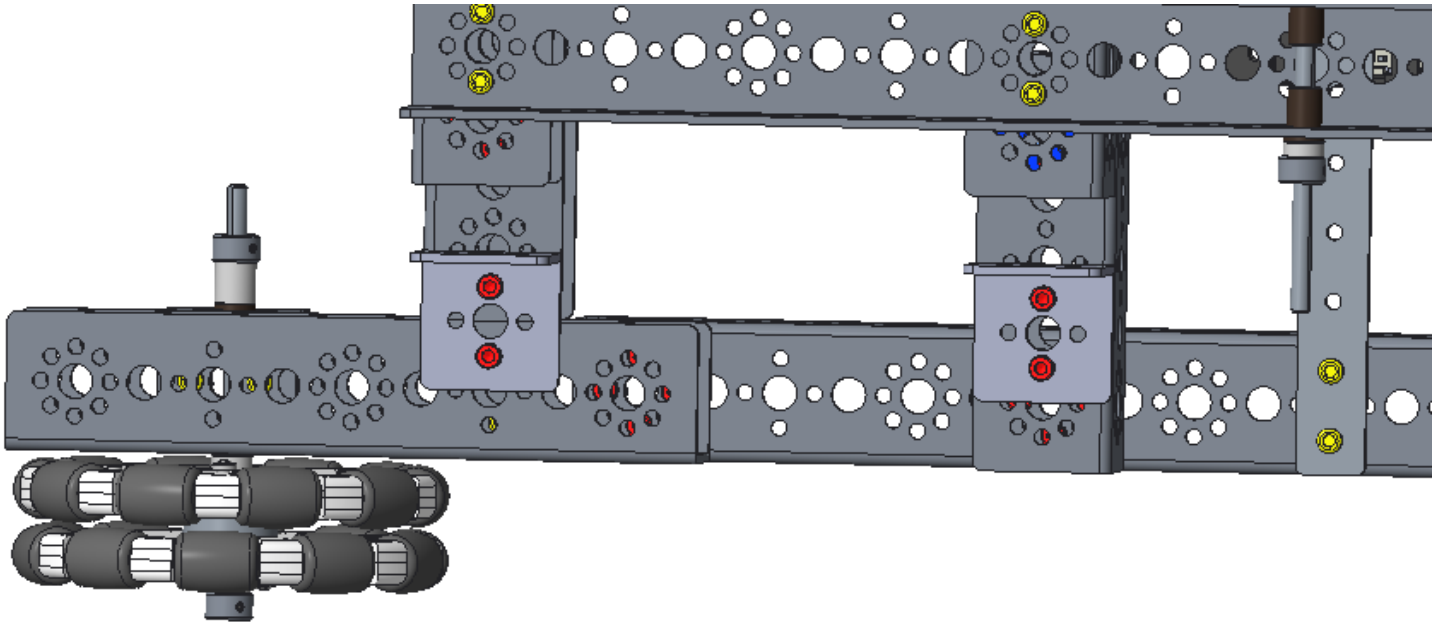

Step 2: Vertical Support

chassis, 144 mm angle (1), l-brackets (2), 160 mm flat (1), 1/2” socket head cap screws (4), keps nuts (4)

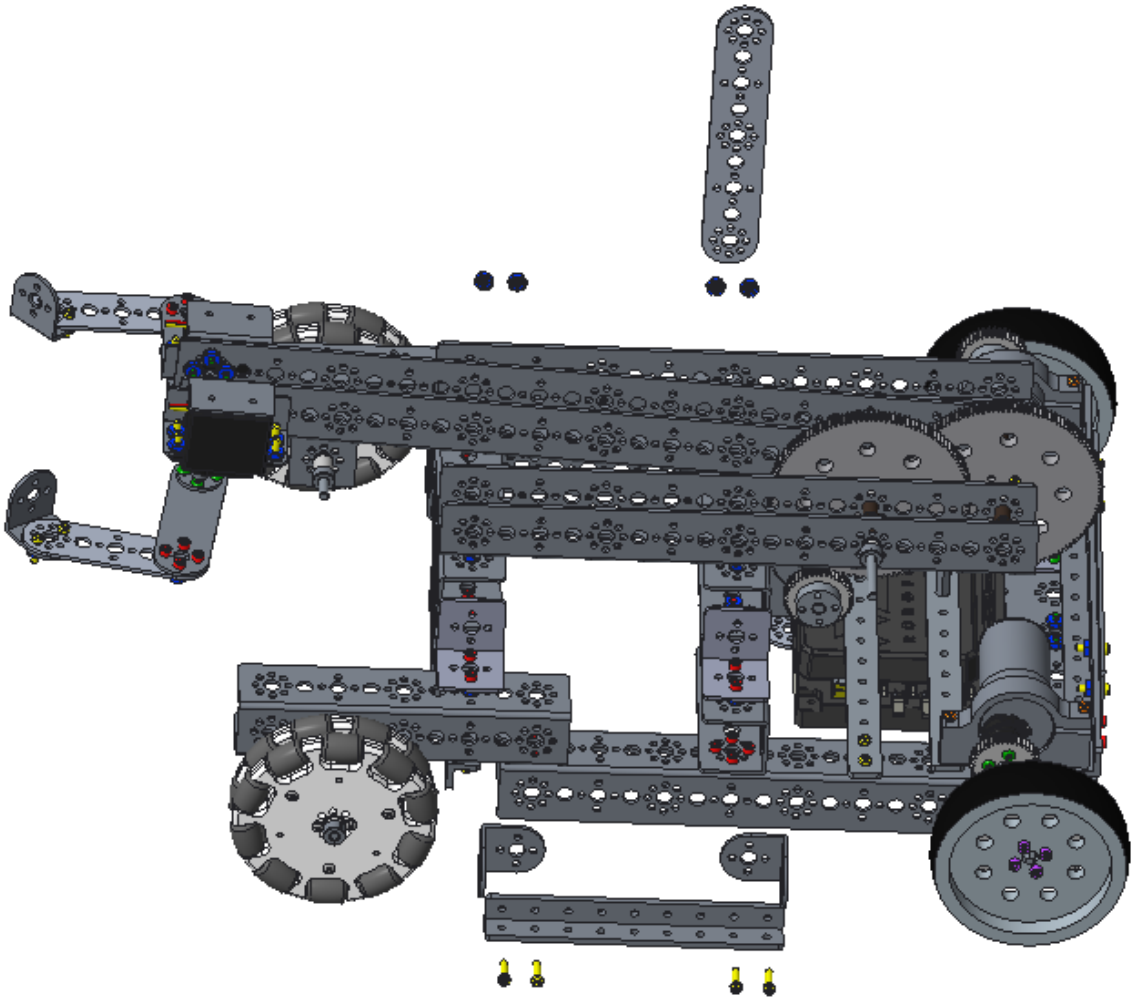

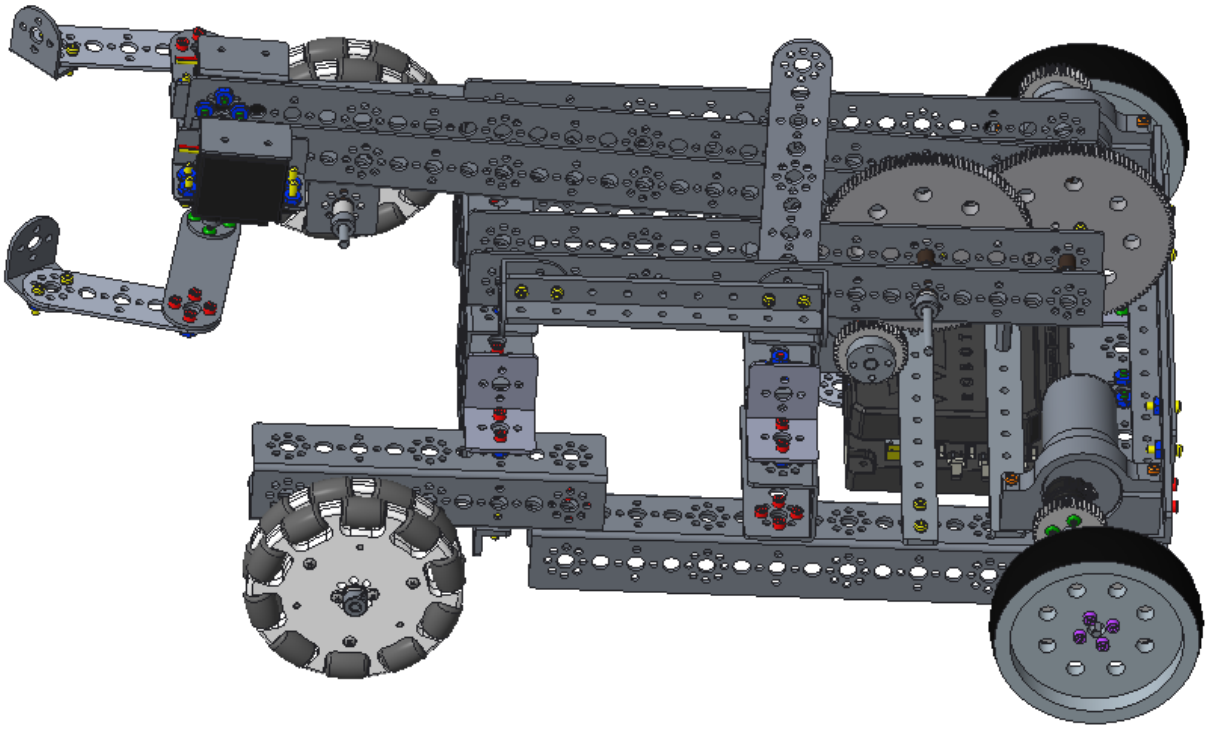

Note that the bolts on the right side hold the angle and l-bracket onto the outside of the channel and the flat bar on the inside of the channel.

The image below is a top view of the robot.

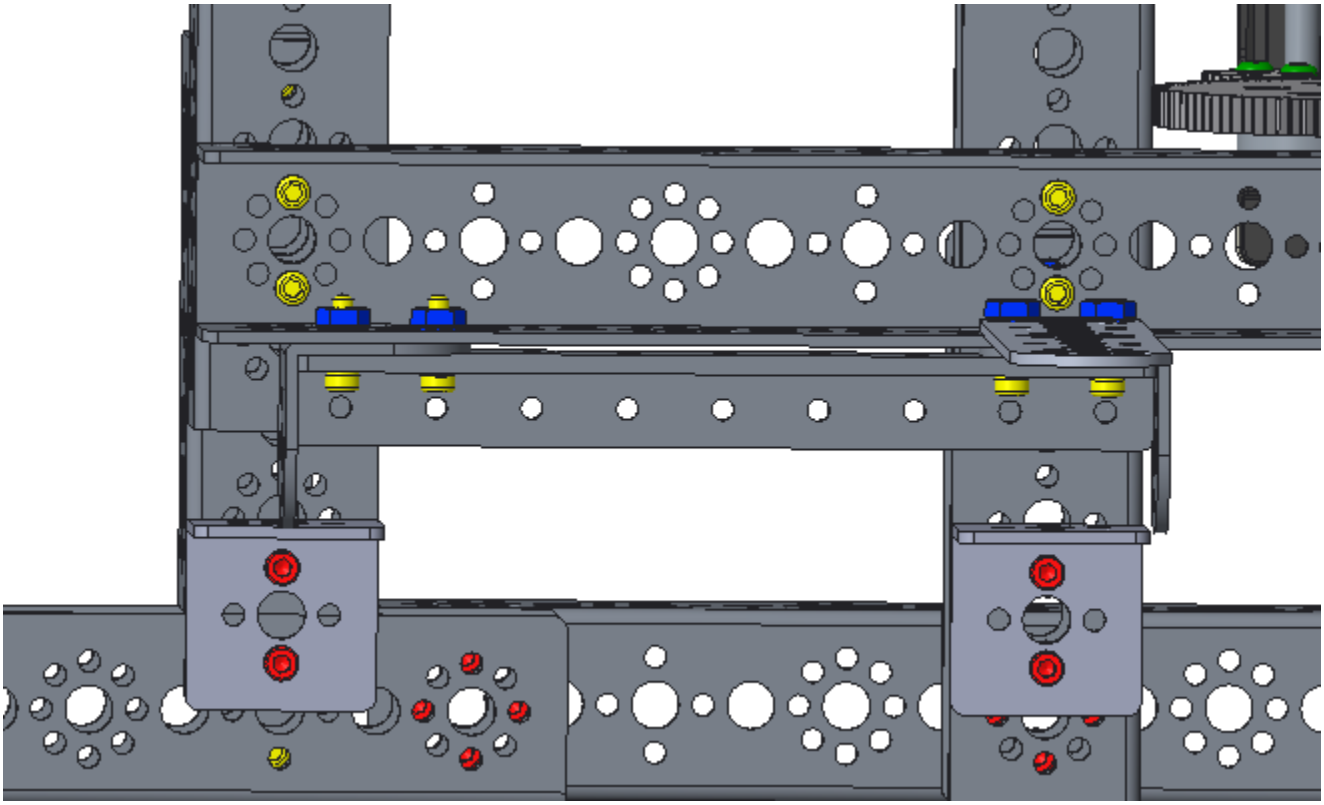

Step 3: Flag Holder Assembly

chassis, single standard-scale servo motor mounting bracket (1), 32 mm channel (1), 1/2” socket head cap screws (4), keps nuts (4)

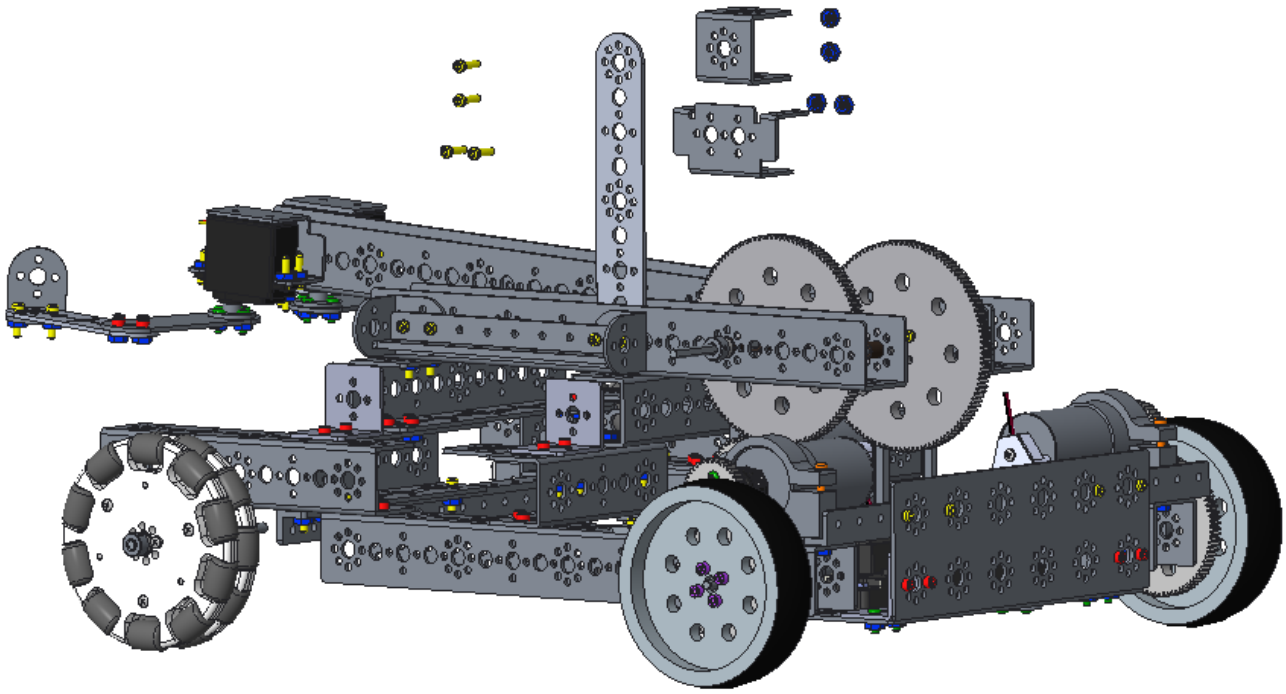

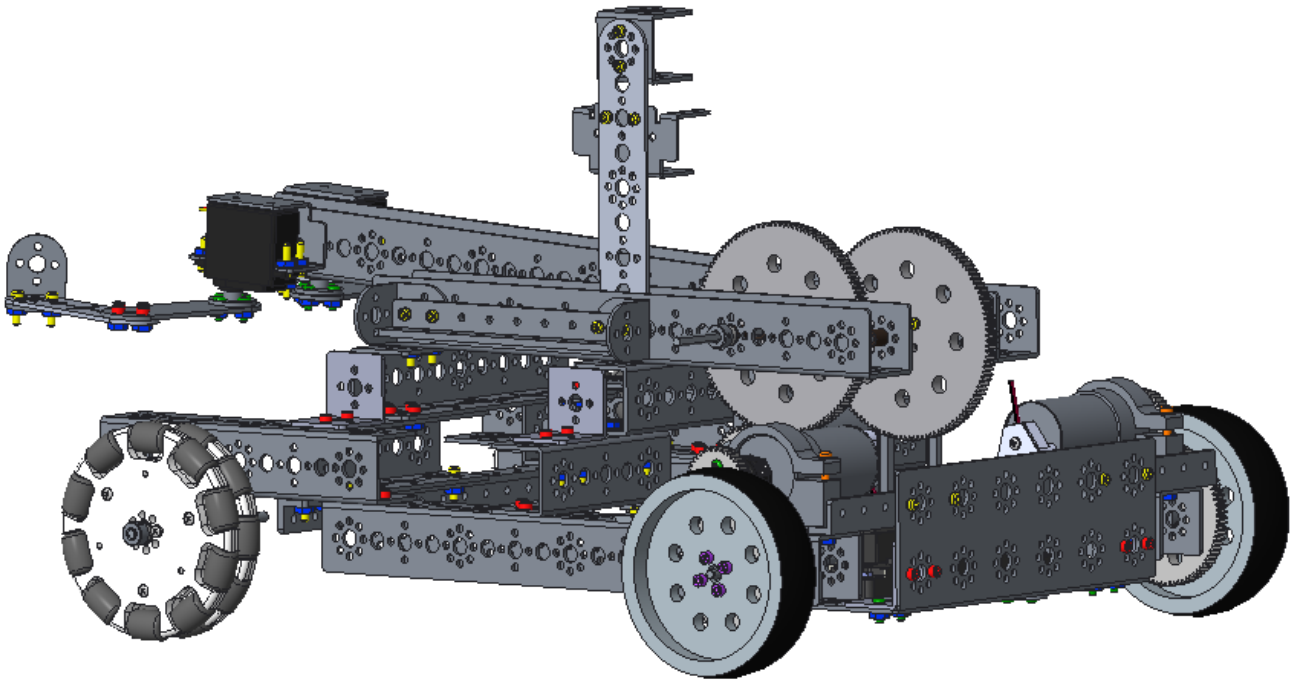

Adding the Power Switch Plate

Step 1: Support

assembly from the previous step, 1” stand-off posts (3), 1/2” socket head cap screws (3)

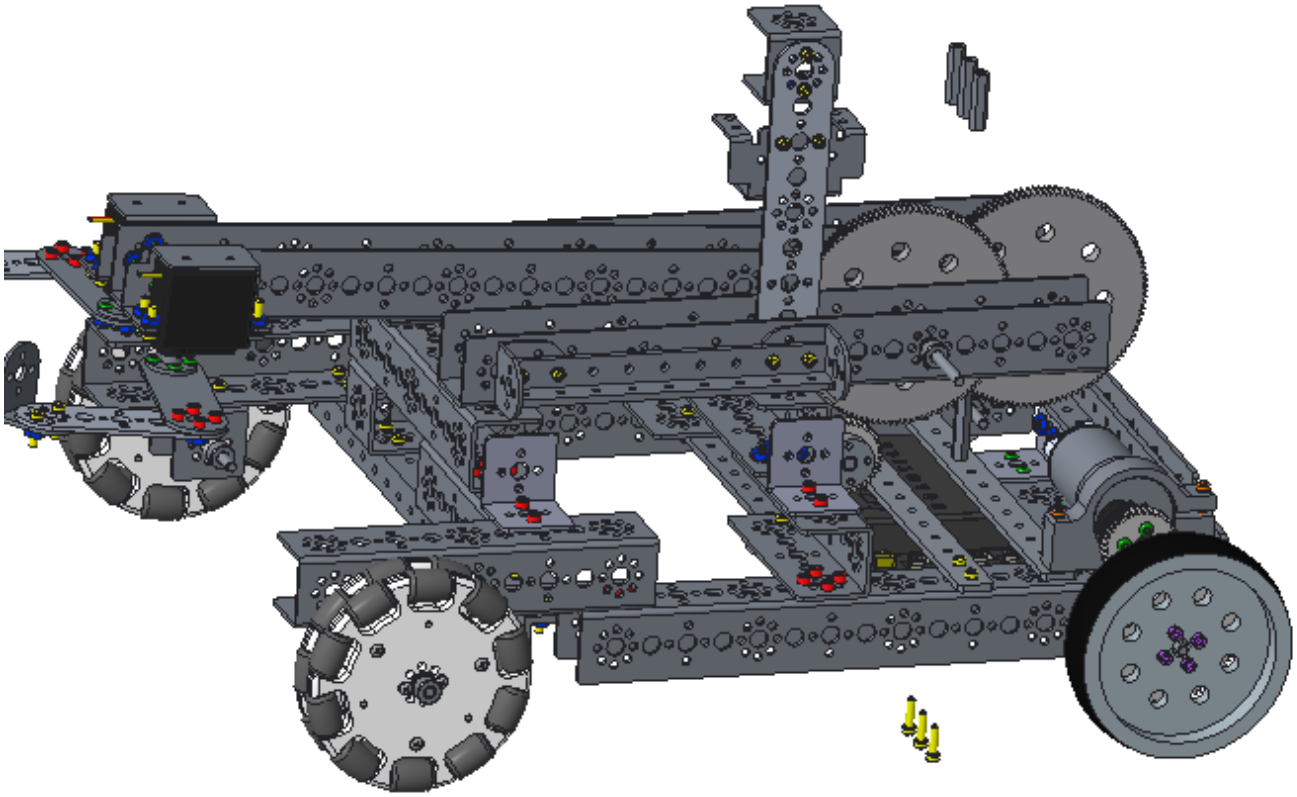

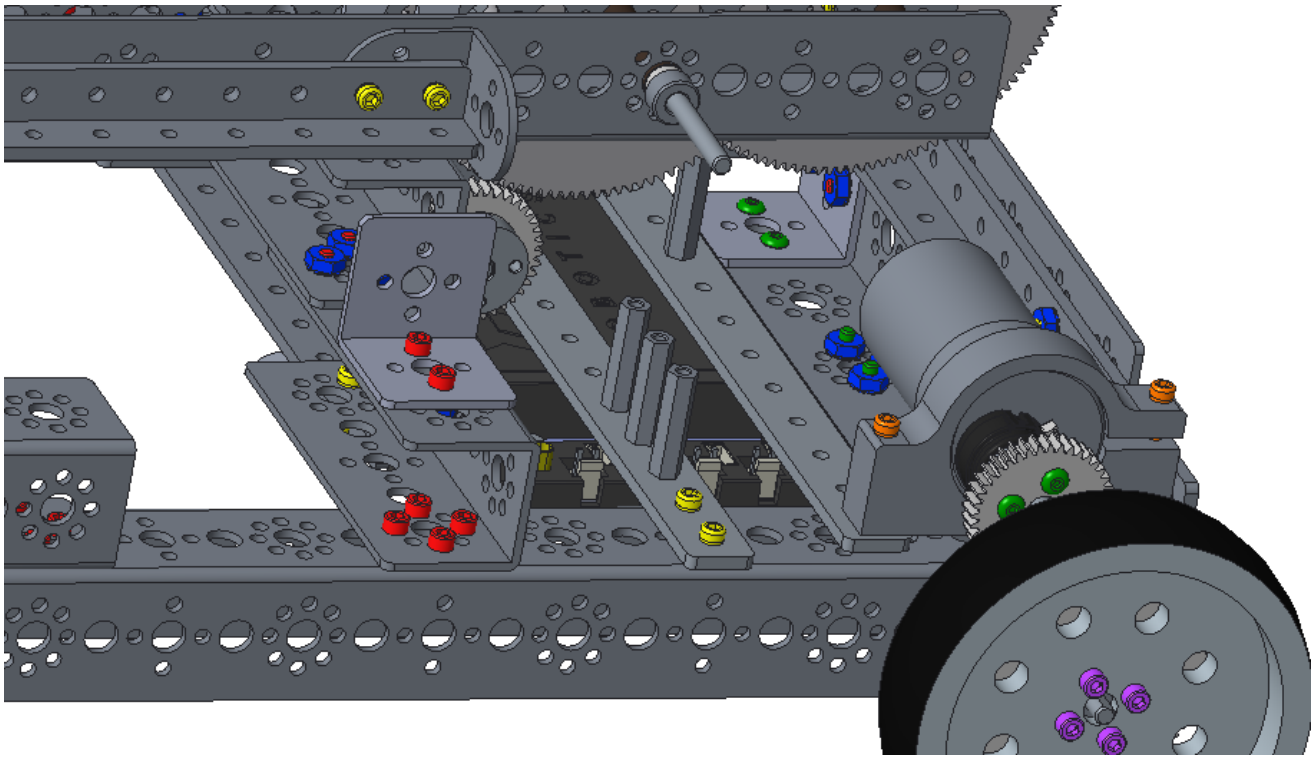

Step 2: Adding the Switch Plate

assembly from the previous step, power switch plate (1), 1/2” socket head cap screws (3)

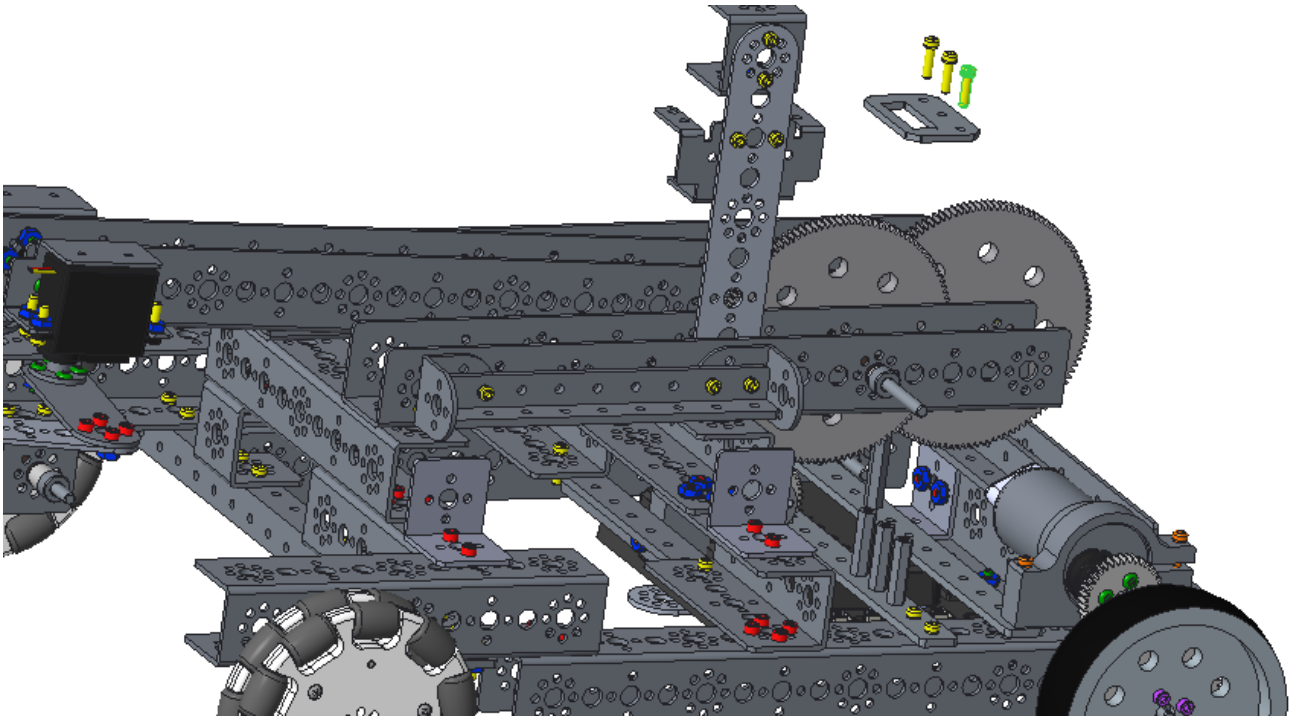

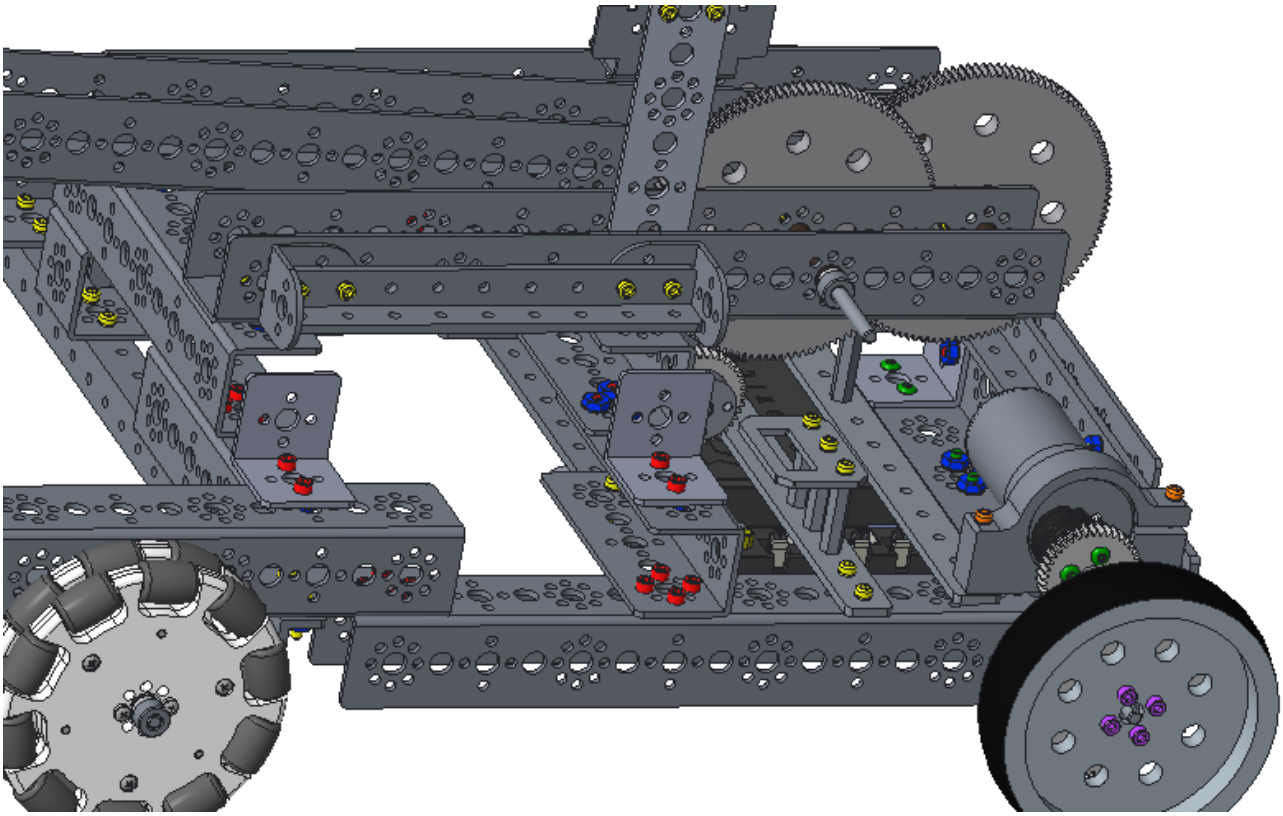

Step 3: Adding the Switch

assembly from the previous step, power switch (1)

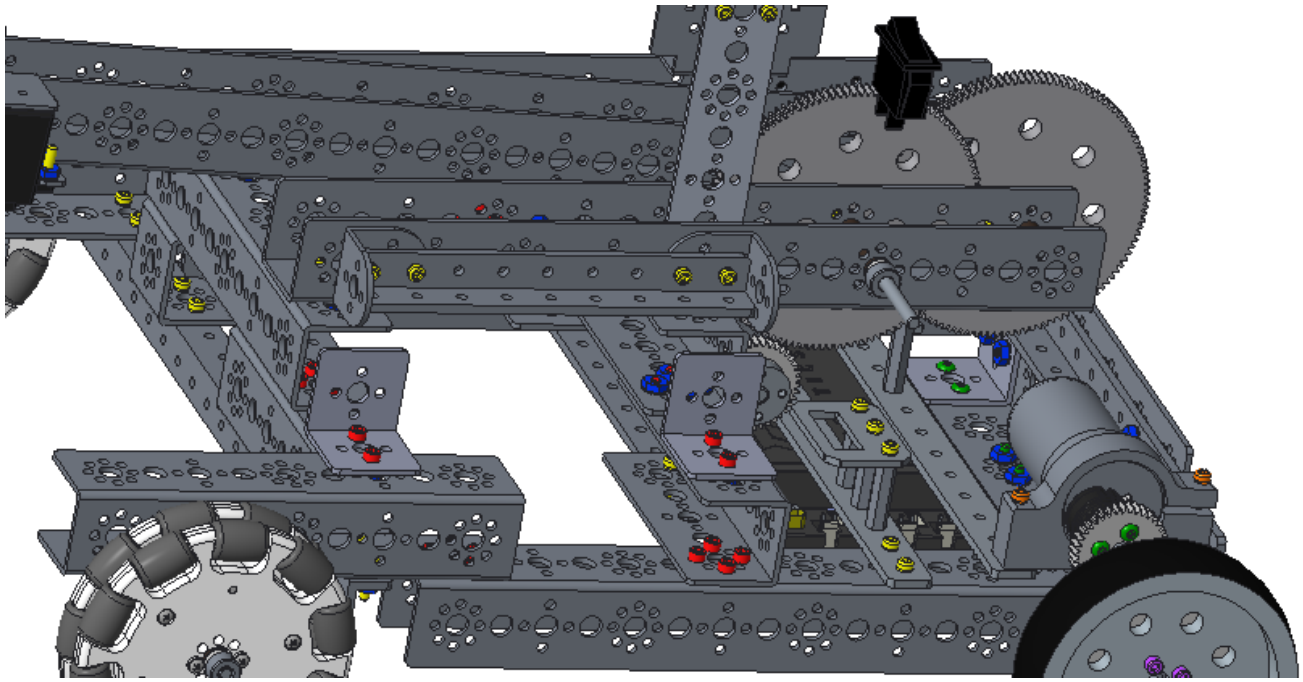

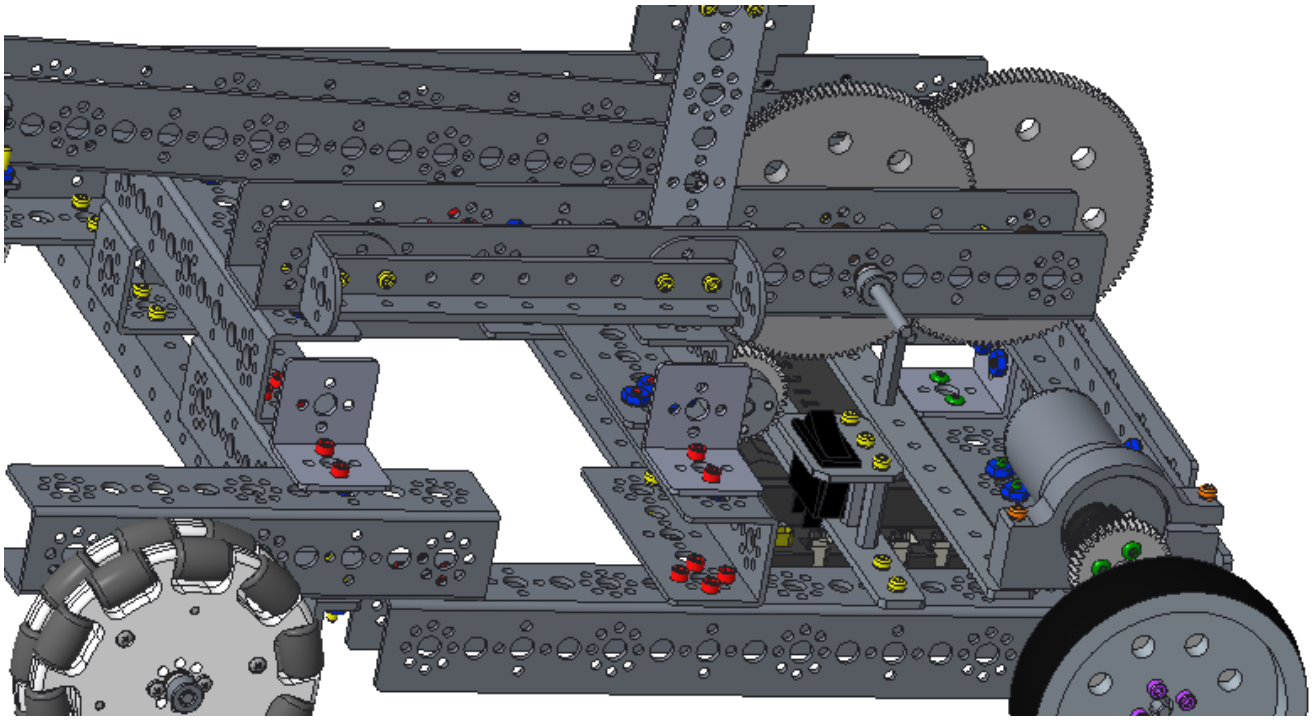

Electronics

This section will outline the installation of the electronics onto the chassis.

Robot Controller

Step 1: Add the Robot Controller Cell Phone to the Chassis

chassis, robot controller cell phone (1)

Place the robot controller cell phone (check the game rules to determine which phones are approved for this year's game - the ZTE Speed is shown) into the holder (green arrow).

Note that the robot phone needs to rotate 90 degrees counterclockwise (as shown below) to fit into the holder. The phone's left side is supported by the cross braces. Its front is supported by the inside corner brackets. Its back is supported by the 144 mm angle. Its top and bottom are supported by the l-brackets.

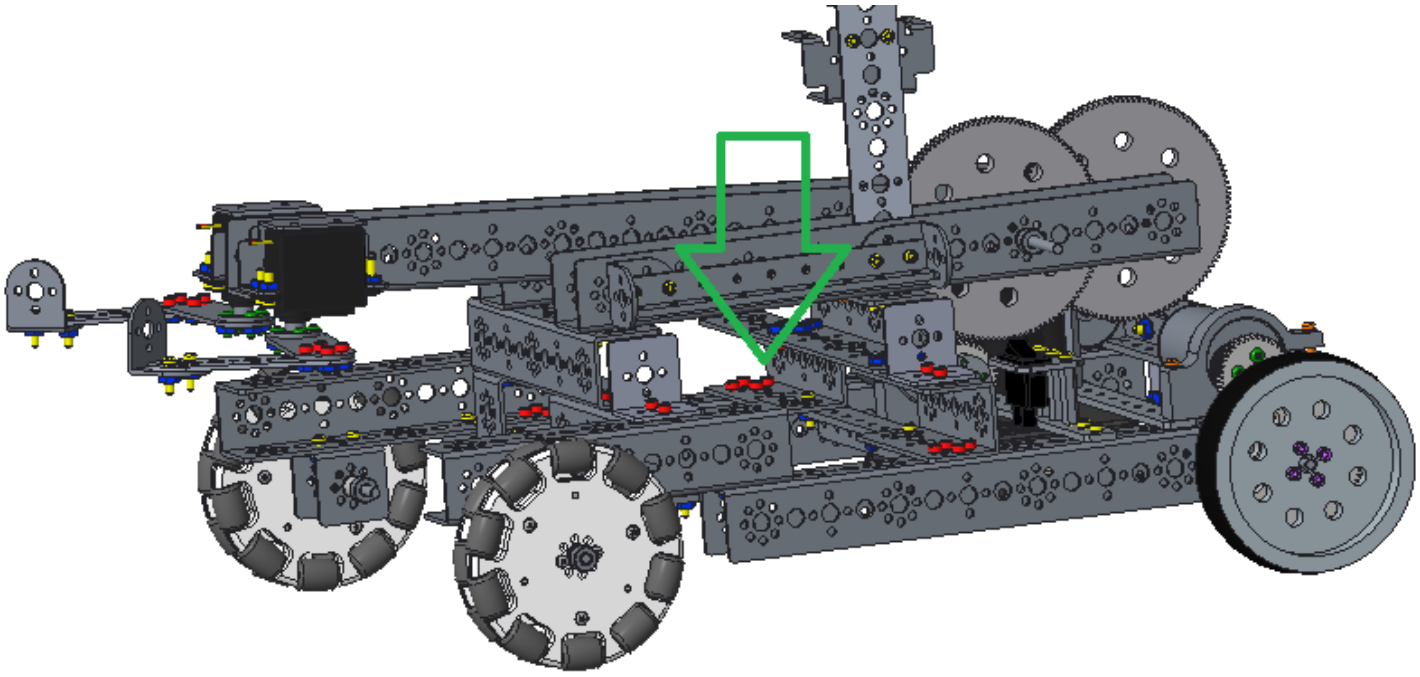

Step 2: Connect the Phone to the USB Cable
chassis, USB Type A male to type mini-B male cable (1)

Connect the mini-b end of the cable with the port on the phone.

Note: The phone is inside the phone holder, but the robot is not shown in the image below.

Step 3: Connect the USB Cable to the Micro USB OTG Adapter Cable
chassis, micro USB OTG adapter cable (1)

Connect the USB end of the USB Type A male to type mini-B male cable with the USB end of the OTG adapter cable.

Note: The USB cable is attached to the phone, which is on the robot. This is not shown in the images below.

Step 4: Connect the Micro USB OTG Adapter Cable to the Expansion Hub
chassis

Connect the micro USB end of the OTG adapter cable with the port on the expansion hub.

Note: The cable and expansion hub are on the robot. This is not shown in the images below.

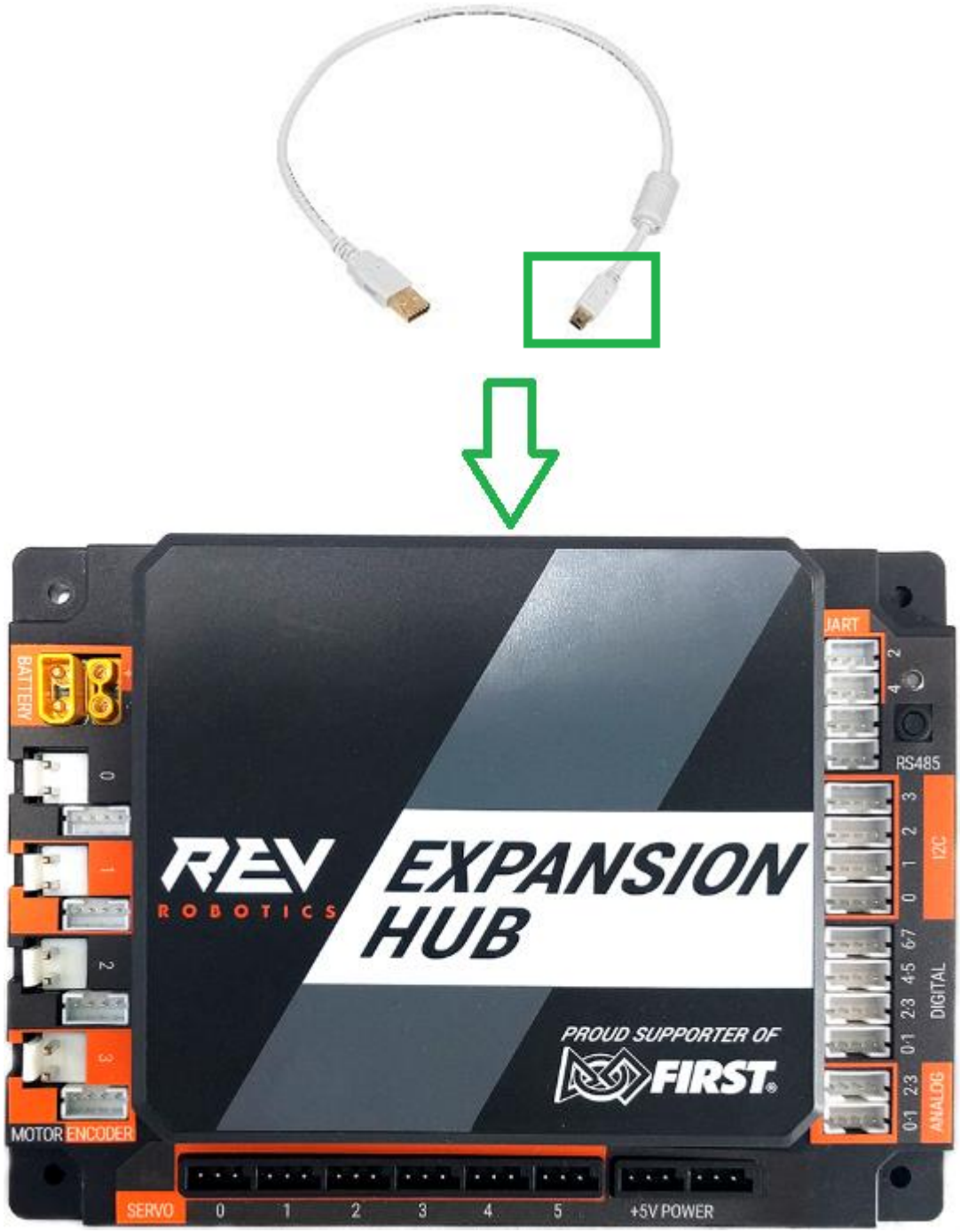

Servos

Step 1: Servo Extension Wires to Servos

Perform twice.

servo extension wires (2)

Connect the wire coming from the servo with the servo extension wire (the connector circled in green).

Note: Match the colors.

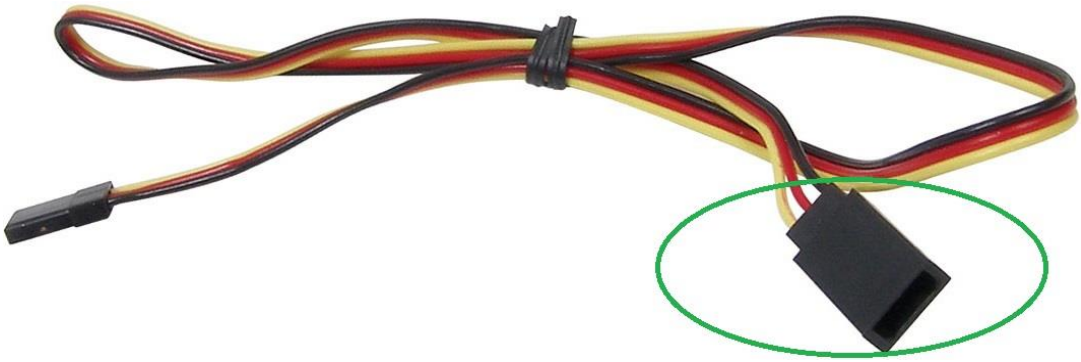

The image only shows one; make two.

Step 2: Servo Extension Wires to Expansion Hub

chassis (with the now attached servo extension wires)

Run the extension wires down the center of the arm channel and over the axle to prevent damage to the wires.

Plug the **left servo**'s extension wire into the expansion hub's **servo port 0**. Plug the **right servo**'s extension into the hub's **servo port 1**.

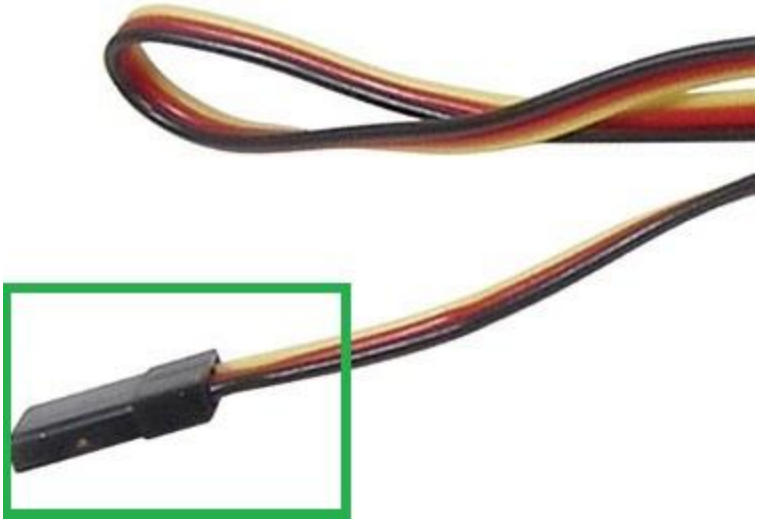

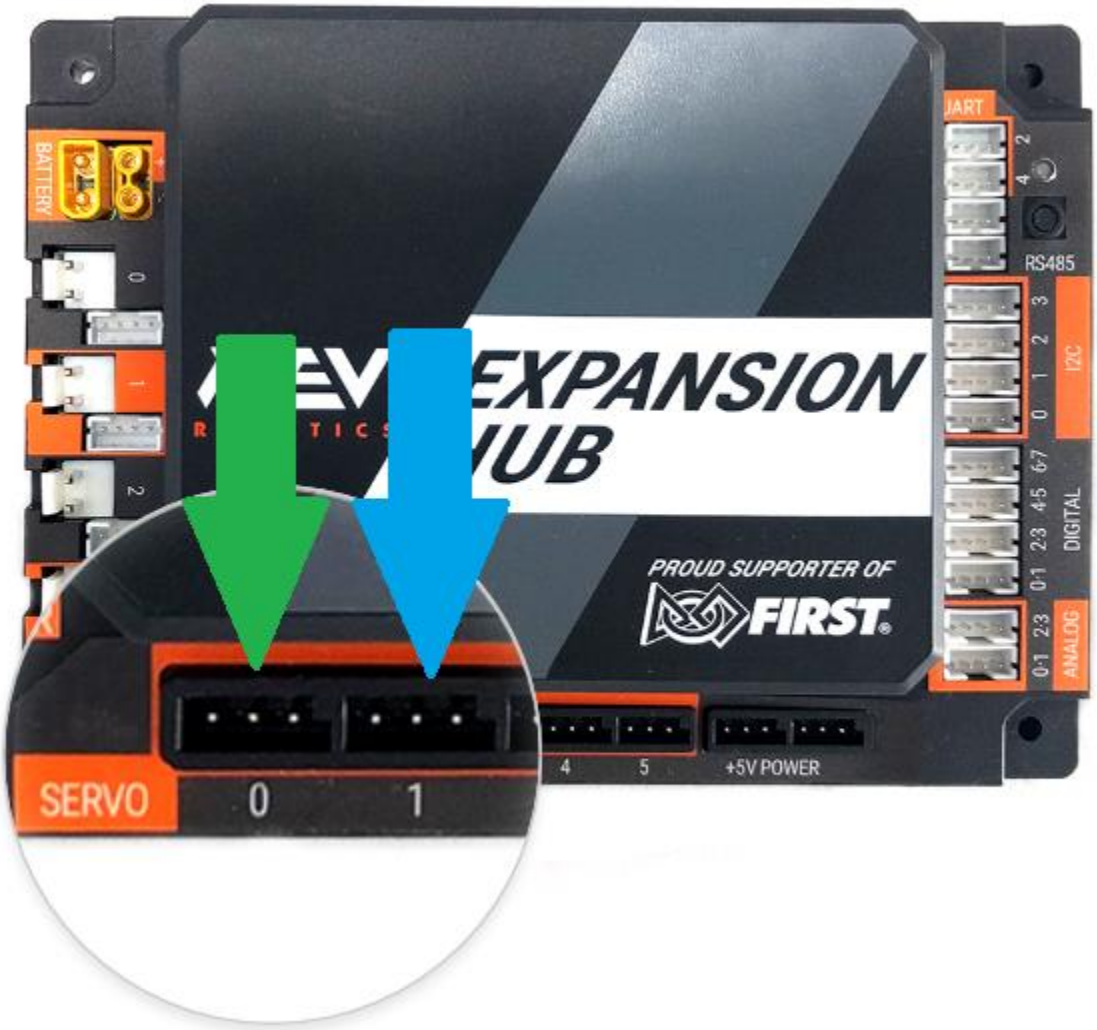

Encoders
Make two.

<u>Step 1: Level Shifter Wires to Level Shifters</u>
level shifter wires (2), level shifters (2)

Connect the wires with the shifters.

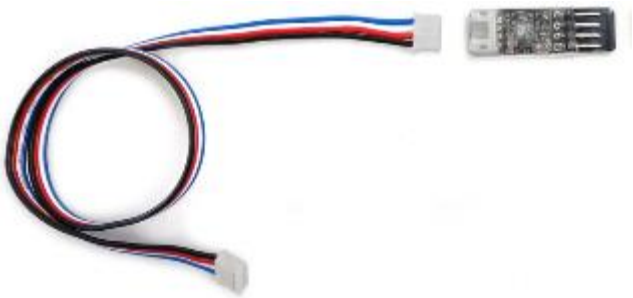

The image only shows one; make two.

Step 2: Level Shifters to Encoder Wires
level shifter (2), encoder wire (2)

The image only shows one; make two.

Step 3: Level Shifter Wires to Expansion Hub
chassis, level shifter wire assemblies (2)

Connect the end of one level shifter wire (circled in green) with **port 0** of the expansion hub (indicated by a green arrow in the bottom image). Connect the other end (the encoder wire of the level shifter assembly) with the encoder on the **left** drive motor (not shown).

Connect the end of the other wire with **port 1** of the expansion hub (indicated by a blue arrow in the bottom image). Connect the other end with the encoder on the **right** drive motor (not shown).

The above image only shows one assembly; use two.

DC Motors

Step 1: Motor Power Cables to Extension Hub Cables

Make three.

motor power cable (3), Anderson to JST VH cable (3)

Plug the end of one motor power cable (circled in green) into the Anderson power pole end (circled in green) of the Anderson to JST VH cable.

The images show only one of each cable; make three.

Step 2: Motor Power Cables to Extension Hub

chassis, assemblies from the previous step

Connect the JST VH end (circled in green) of the Anderson to JST VH cable with **port 0** of the expansion hub (indicated by a **green** arrow in the bottom image). Connect the other end (the DC motor wire of the cable assembly) into the DC motor on the **left** side of the robot (not shown).

Connect the JST VH end of a second wire assembly with **port 1** of the expansion hub (indicated by a **blue** arrow in the bottom image). Connect the other end with the DC motor on the **right** side of the robot (not shown).

Connect the JST VH end of a third wire assembly with **port 2** of the expansion hub (indicated by a **yellow** arrow in the bottom image). Connect the other end with the DC motor on the **arm** of the robot (not shown).

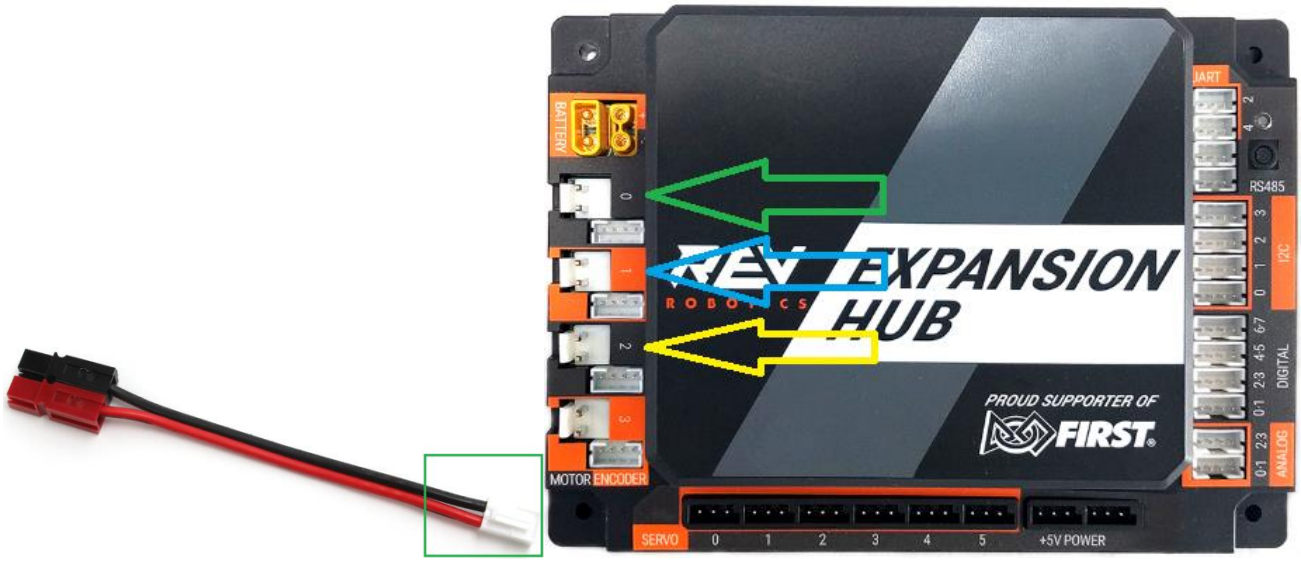

Battery and Switch

Step 1: Install Battery

chassis, battery, zip tie (not shown)

Place the battery on the 288 mm flat bars. The two 2” standoffs will help keep the battery in place. Use a zip tie (not shown) around the center of the battery and the two flat bars to secure the battery to the bars.

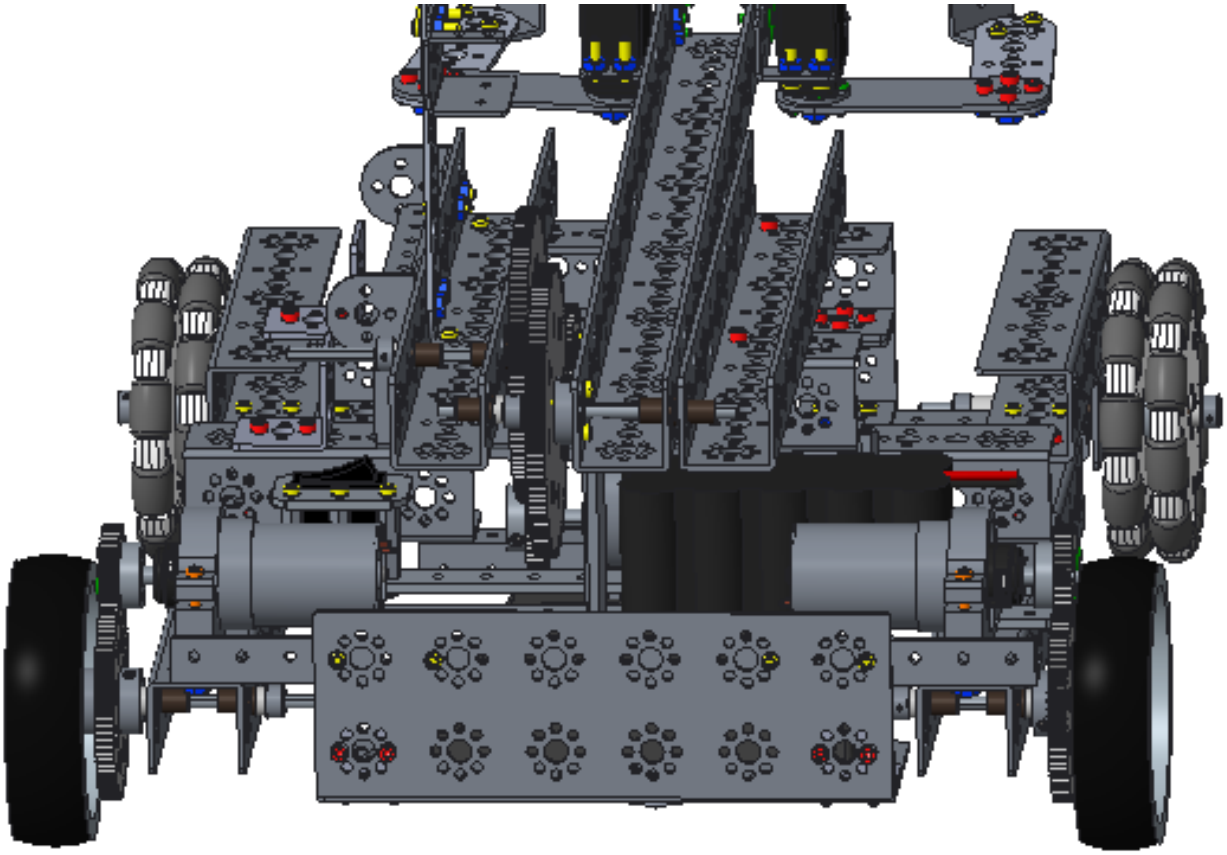

Step 2: Install Switch
chassis, switch (1)

Run the wires through the switch bracket, which is mounted on the left side of the robot. Plug the expansion hub end of the switch (green square) into the expansion hub (green square).

Step 3: Connect the Switch to the Switch Adapter Cable
chassis, Anderson Power Pole to XT30 Adapter (1)

Plug the XT30 end of the adapter into the switch wire - green squares.

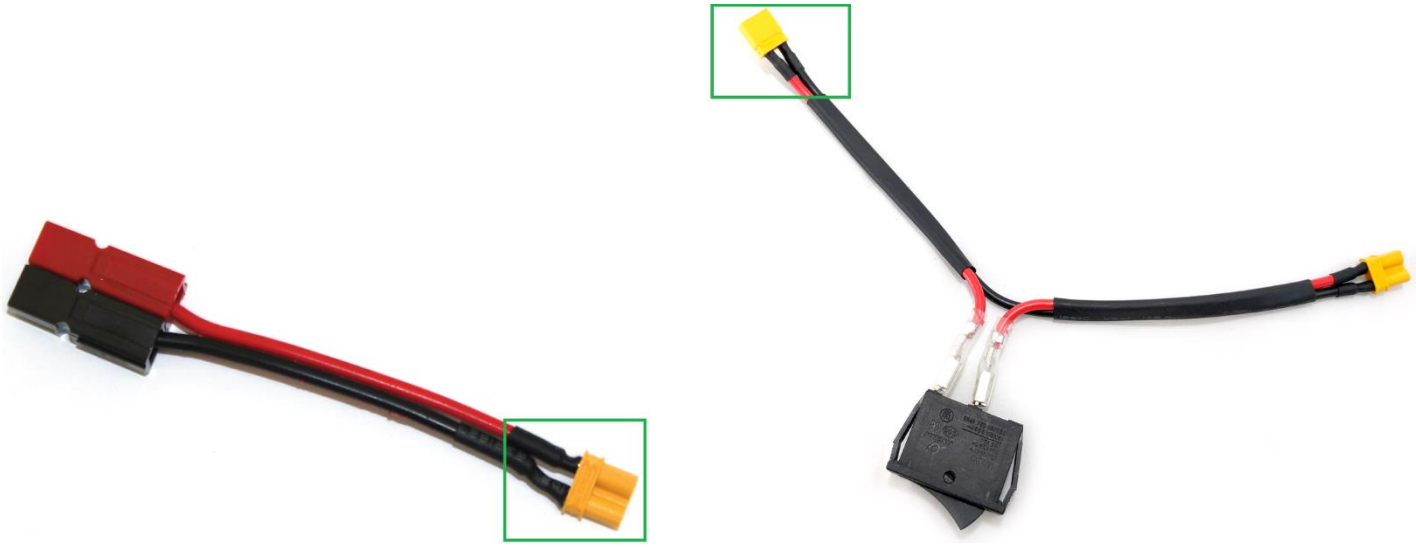

Step 4: Connect the Battery to the Switch Adapter Cable
chassis

Plug the Anderson Power Pole end of the adapter (green arrow) into the battery connector (green arrow).

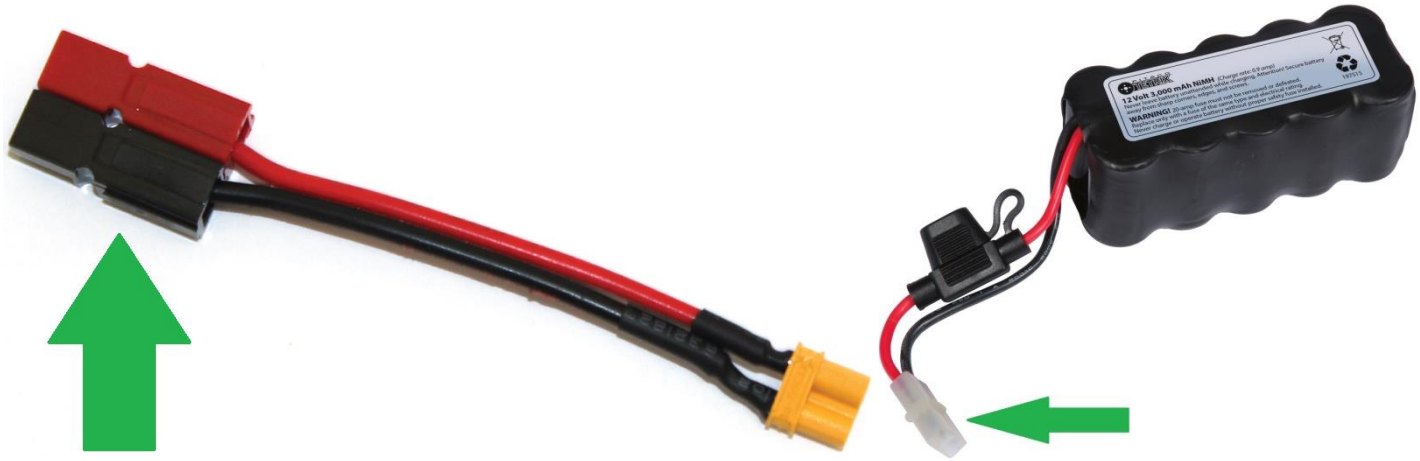

Final Steps

The robot has been built, but that is only the beginning. Gear Trains need fine adjustments. Wires need to be secured. Programming will be needed to make the robot functional. Testing should be done to determine whether anything needs to be changed or optimized for the season's game rules. It will also show whether more cables need to be secured or re-routed. Numbers and other stickers will be needed to make the robot competition ready. Check the game rules for all of the applicable stickers - usually the game rules include a self-inspection check list. USE THIS CHECK LIST BEFORE COMPETITION!

Visit the FIRST website for programming instructions and game rules.

Wiring Safety

Additional zip ties should be purchased for securing wires to the chassis. The standard four-inch size works well for this. Also, electrical tape can be used to secure motor wires to the motor. Longer zip ties or Velcro straps can be used to keep the battery from falling out of the robot in case it tips over. Make sure that axle hub, motor hub, and axle collar set screws are installed, so that the screw is on the flat side of the axle, which will prevent assemblies from spinning on the axle.

Mesh Gears Properly

The following pictures show examples of meshing the gears. The first is too loose; the second is too tight; the third (center below) is a good mesh. To test, rotate the mechanism by hand. If the gear teeth slip, then it is too loose. If the mechanism binds, then it is too tight.

Remember to tighten the motor mount bolt, so the motor will not rotate.

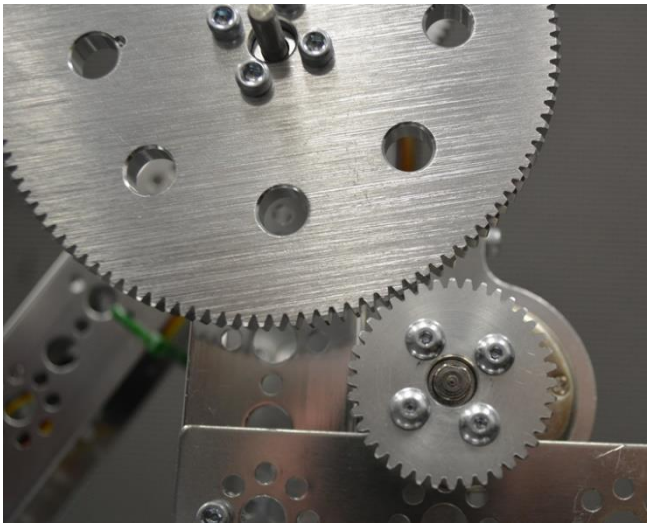

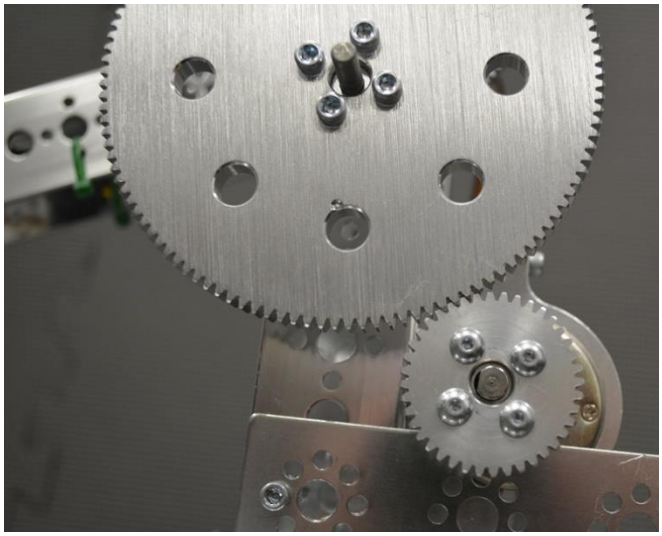

Square the Frame
Make sure that the frame is square. Once the frame is square, make sure that all of the frames bolts are tight. It is hard to drive a crooked robot straight!

Optimizing the Phone Holder
It is recommended that an approved material such as non-skid be layered in the back of the phone holder to prevent damage to the phone.

It is recommended that the phone be secured in the holder using a zip tie or some other mechanism to prevent it from being separated from the robot during competition.

Optimizing the Battery Holder
It is recommended that the battery be secured in the holder using a zip tie or some other mechanism to prevent it from being separated from the robot during competition.

Optimizing the Hand/Grippers
Place non-skid around the gripper to provide extra grip…so hockey pucks, wiffle balls, pipes, racquetballs, crates, rings, blocks or practice golf balls, or red herrings can be collected with ease!

Add Team Numbers
Usually team numbers need to be on both sides of the robot. Make them BIG. Make them easy to distinguish from other robots. Show off team numbers. They will be examined by many scouts while the robot is on the field. For further instructions, look at the Game Manual Part 1.

Appendix A – Resources

Game Forum Q&A

http://ftcforum.usfirst.org/forum.php

Anyone may view questions and answers within the *FIRST*® Tech Challenge Game Q&A forum without a password. To submit a new question, you must have a unique Q&A System User Name and Password for your team.

FIRST Tech Challenge Game Manuals

Part 1 and 2 - http://www.firstinspires.org/node/4271

FIRST Headquarters Pre-Event Support

Phone: 603-666-3906
Mon – Fri
8:30am – 5:00pm
Email: FTCTeams@firstinspires.org

FIRST Websites

FIRST homepage – www.firstinspires.org

FIRST Tech Challenge Page – For everything *FIRST* Tech Challenge.

FIRST Tech Challenge Volunteer Resources – To access public Volunteer Manuals.

FIRST Tech Challenge Event Schedule – Find *FIRST* Tech Challenge events in your area.

FIRST Tech Challenge Social Media

FIRST Tech Challenge Twitter Feed - If you are on Twitter, follow the *FIRST* Tech Challenge Twitter feed for news updates.

FIRST Tech Challenge Facebook page - If you are on Facebook, follow the *FIRST* Tech Challenge page for news updates.

FIRST Tech Challenge YouTube Channel – Contains training videos, Game animations, news clips, and more.

FIRST Tech Challenge Blog – Weekly articles for the *FIRST* Tech Challenge community, including Outstanding Volunteer Recognition!

FIRST Tech Challenge Team Email Blasts – contain the most recent *FIRST* Tech Challenge news for Teams.

FIRST Tech Challenge Google+ community - If you are on Google+, follow the *FIRST* Tech Challenge community for news updates.

Feedback

We strive to create support materials that are the best they can be. If you have feedback about this manual, please email ftcteams@firstinspires.org. Thank you!

Appendix B: Bill of Material List

This list does not include the cell phones, the Rev Robotics Expansion Hub, nor the cables that connect the electronics.

Quantity	CAD Name	Common Name
4	TETRIX_739068_2012	288 mm Channel
4	TETRIX_739067_2012	160 mm Channel
52	TETRIX_739098_2012	6-32 x 5/16” Socket Head Cap Screws
127	TETRIX_739094_2013	Kep Nuts
4	TETRIX_739065_2012	32 mm Channel
62	TETRIX_739097_2013	6-32 x 1/2” Socket Head Cap Screws
8	TETRIX_736466_HUB_2012	4” Omni Wheel
17	TETRIX_739091_2013	Bronze Bushing
11	TETRIX_739100_2012	1/8” Nylon Axle Spacer
8	TETRIX_739092_COLLAR_2012	Axle Set Collar
6	TETRIX_739088_2013	100 mm Axle
2	TETRIX_739101_2012	3/8” Nylon Axle Spacer
2	TETRIX_739055_2012	4” Tire/Wheel
2	TETRIX_739090_2012	Hub Gear Spacer
2	TETRIX_739086_2012	80-Tooth Gear
4	TETRIX_739172_COLLAR_2012	Axle Hub
2	TETRIX_739071_2012	288 mm Angle
3	TETRIX_739066_2012	96 mm Channel
2	TETRIX_739070_2012	288 mm Flat Bar
2	TETRIX_739103_2012	2” Stand-off Post
2	TETRIX_731901_120_2013	120-Tooth Gear
4	TETRIX_739028_2012	40-Tooth Gear
1	TETRIX_739069_2012	416 mm Channel
3	TETRIX_739060_2012	Standard-Scale Servo Motor Brackets
2	TETRIX_739197_SERVO_2012	Standard-Scale HS-485HB Servo Motor
35	TETRIX_739111_2012	6-32 x 3/8” Button Head Cap Screws
2	TETRIX_739061_2012	Flat Bracket
2	TETRIX_739273_2013	96 mm Flat
4	TETRIX_739062_2012	L-Bracket
2	TETRIX_739072_2012	144 mm Angle
3	TETRIX_739089_2012	DC Motor Mount
3	TETRIX_739079_COLLAR_2012	Motor Shaft Hub
3	TETRIX_739083_MOTOR_2012	DC Motor
2	TETRIX_738000_2012	DC Motor Encoder

2	TETRIX_739073_2012	64 mm x 192 mm Flat Building Plate
4	TETRIX_739281_CORNER_BRA_2013	Inside Corner Bracket
2	TETRIX_739272_2013	160 mm Flat
1	TETRIX_739057_2012	Battery
3	TETRIX_739102_2012	1” Stand-off Post
1	ACRYLIC_SWITCH_BRACKET	Power Switch Bracket
1	SWITCH	Power Switch

Special Thanks and Best Wishes

We’d like to thank Mary and Laura Spangler for helping us finish this project. Mary stepped in at the last minute and helped with CREO while David was otherwise occupied. Laura made yummy peach ice cream and used that to help encourage us to finish.

We hope you have enjoyed the time you spent building your Push ‘Bot. If you have any questions or comments, please feel free to contact us at ssi@lydean-david.net.

David and Lydean

ssi@lydean-david.net

www.ssi.lydean-david.net